7.9.2 Potential Difference

62 minutes

69 marks

Q1. A set of Christmas tree lights is made from twenty identical lamps connected in series.

(a) Each lamp is designed to take a current of 0.25 A. The set plugs directly into the 230 V mains electricity supply.

(i) Write down the equation that links current, potential difference and resistance.

.....

.....

(1)

(ii) Calculate the resistance of **one** of the lamps. Show clearly how you work out your final answer and give the unit.

.....

.....

.....

.....

Resistance = ...

(4)

(iii) What is the total resistance of the set of lights?

.....

.....

Total resistance = ...

(1)

(b) How does the resistance of a filament lamp change as the temperature of the filament changes?

.....

.....

.....

.....

(1)
(Total 7 marks)

Q2. A circuit diagram is shown below.

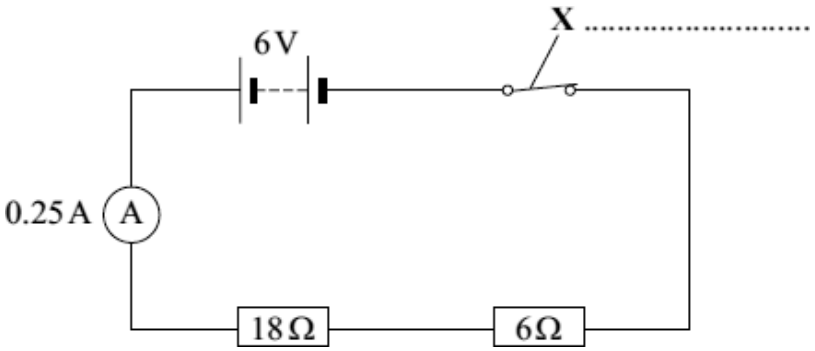

(a) Use a word from the box to label component **X**.

fuse	**switch**	**thermistor**

(1)

(b) Calculate the total resistance of the two resistors in the circuit.

.....

Total resistance = ... Ω

(1)

(c) The reading on the ammeter is 0.25 A.

The current through the 6 Ω resistor will be:

bigger than 0.25 A **equal to 0.25 A** **smaller than 0.25 A**

Draw a ring around your answer

(1)

(d) The 6 V battery is made by correctly joining several 1.5 V cells in series.

Calculate the number of cells needed to make the battery.

.....

Number of cells = ...

(1)
(Total 4 marks)

Q3. (a) The lamps in the circuits drawn below are all identical.
Each of the cells has a potential difference of 1.5 volts.

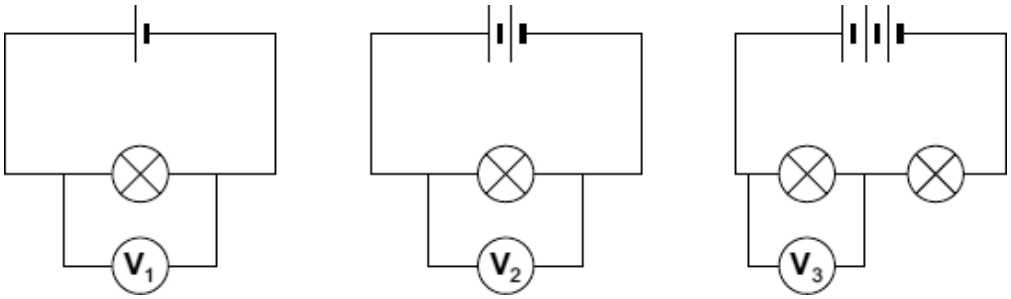

(i) What is the potential difference across the 3 cells that are joined in series?

.....

Potential difference = ... V

(1)

(ii) What will be the reading on the voltmeter labelled $\mathbf{V_3}$?

Voltmeter reading $\mathbf{V_3}$ = ... V

(1)

(iii) Which voltmeter, $\mathbf{V_1}$, $\mathbf{V_2}$ or $\mathbf{V_3}$, will give the highest reading?

Draw a ring around your answer.

$\mathbf{V_1}$ $\mathbf{V_2}$ $\mathbf{V_3}$

(1)

(b) The diagram below shows a simple circuit.

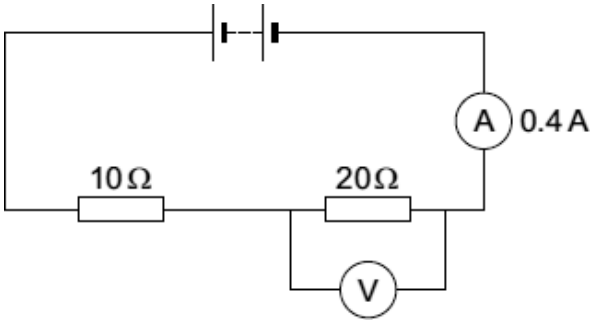

(i) Calculate the total resistance of the two resistors in the circuit.

.....

Total resistance = ... Ω

(1)

(ii) Use the equation in the box to calculate the reading on the voltmeter.

potential difference = current × resistance

Show clearly how you work out your answer.

.....

.....

Voltmeter reading = ... V

(2)

(iii) The current through a resistor at constant temperature changes when the potential difference across the resistor changes.

Which **one** of the graphs, **X**, **Y** or **Z**, shows how the current changes?

Write your answer, **X**, **Y** or **Z**, in the box.

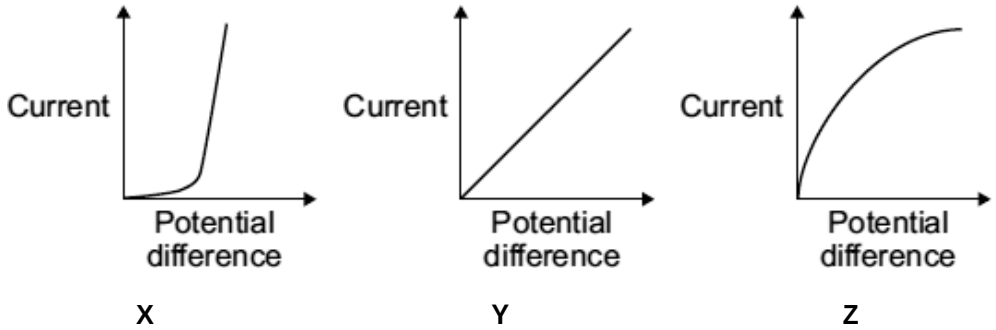

Graph ☐

(1)
(Total 7 marks)

Q4. (a) The diagram shows a simple circuit.

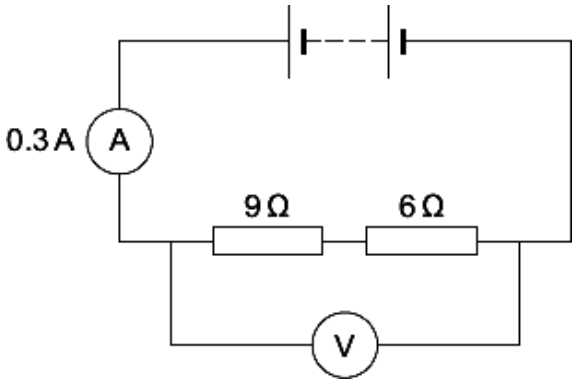

(i) Calculate the total resistance of the two resistors in the circuit.

.....

Total resistance = ... Ω

(1)

(ii) Calculate the reading on the voltmeter.

Use the correct equation from the Physics Equations Sheet.

Show clearly how you work out your answer.

.....

.....

Voltmeter reading = ... V

(2)

(iii) Draw a ring around the correct answer in the box to complete the sentence.

Replacing one of the resistors with a resistor of higher value will

decrease
not change
increase

the reading on the ammeter.

(1)

(b) The voltmeter in the circuit is replaced with an oscilloscope.

Which one of the diagrams, **X**, **Y** or **Z**, shows the trace that would be seen on the oscilloscope?

Write your answer, **X**, **Y** or **Z**, in the box.

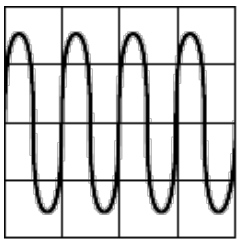

X

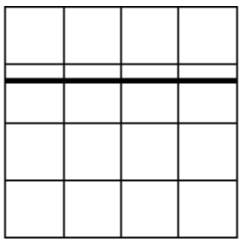

Y

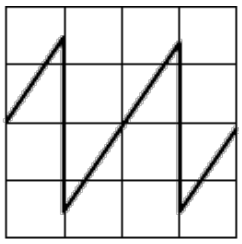

Z

Diagram

Give a reason for your answer.

.....

.....

.....

(2)
(Total 6 marks)

Q5. (a) The diagram shows the circuit used to investigate the resistance of a sample of a material.
The diagram is not complete; the ammeter and voltmeter are missing.

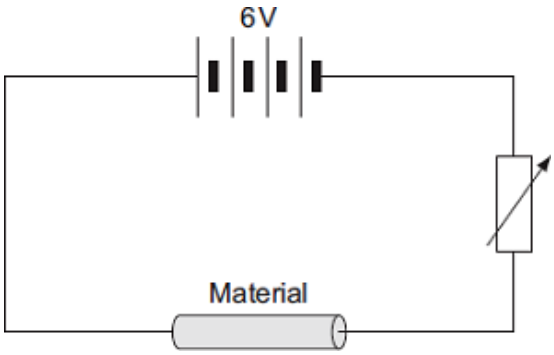

(i) Draw the symbols for the ammeter and voltmeter on the diagram in the correct places.

(2)

(ii) How can the current through the material be changed?

.....

.....

(1)

(b) The material, called conducting putty, is rolled into cylinders of different lengths but with equal thickness.

Graph 1 shows how the resistance changes with length.

Graph 1

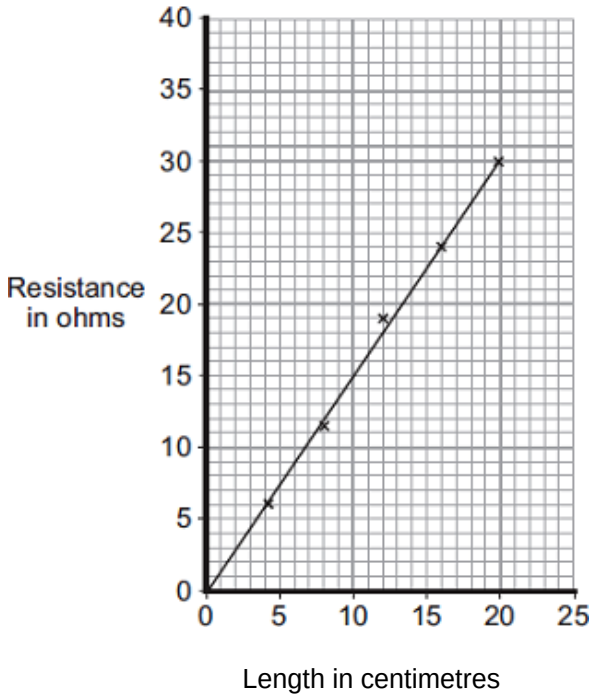

(i) The current through a 25 cm length of conducting putty was 0.15 A.

Use **Graph 1** to find the resistance of a 25 cm length of conducting putty.

Resistance = ... ohms

(1)

(ii) Use your answer to **(b) (i)** and the equation in the box to calculate the potential difference across a 25 cm length of conducting putty.

potential difference = current x resistance

Show clearly how you work out your answer.

.....

.....

.....

Potential difference = ... volts

(2)

(c) A second set of data was obtained using thicker pieces of conducting putty. Both sets of results are shown in **Graph 2**.

Graph 2

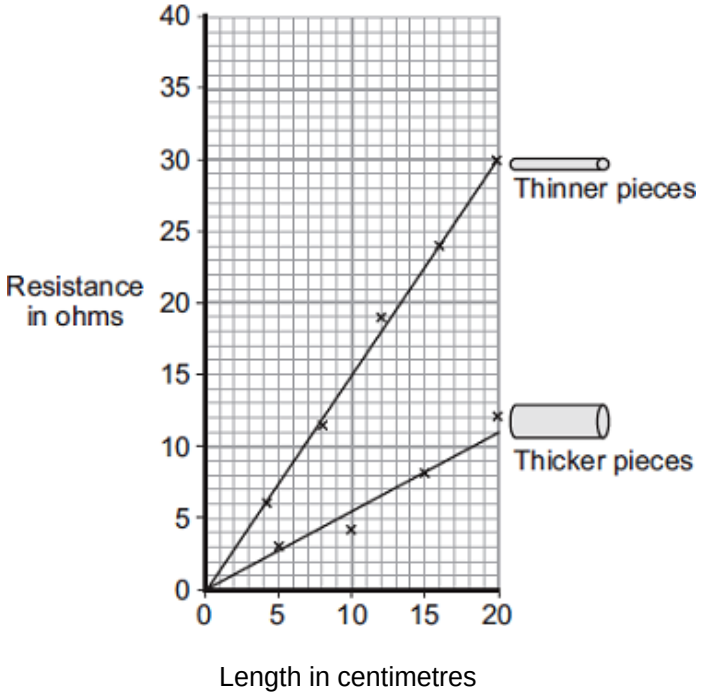

(i) What is the relationship between the resistance and the thickness of the conducting putty?

.....

.....

(1)

(ii) Name **one** error that may have reduced the accuracy of the results.

.....

(1)

(iii) How could the reliability of the data have been improved?

.....

.....

(1)
(Total 9 marks)

Q6. (a) Electrical circuits often contain resistors.

The diagram shows **two** resistors joined in series.

Calculate the total resistance of the **two** resistors.

.....

Total resistance = ... Ω

(1)

(b) A circuit was set up as shown in the diagram. The three resistors are identical.

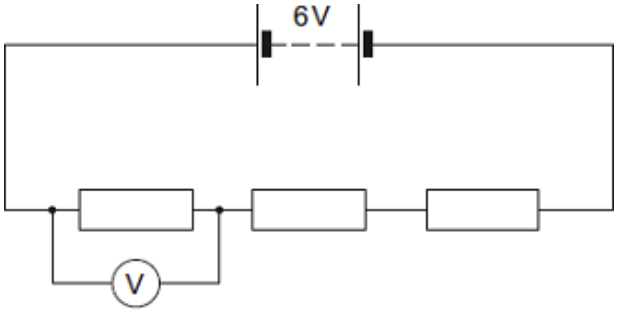

(i) Calculate the reading on the voltmeter.

.....

.....

Reading on voltmeter = ... V

(2)

(ii) The same circuit has now been set up with two ammeters.

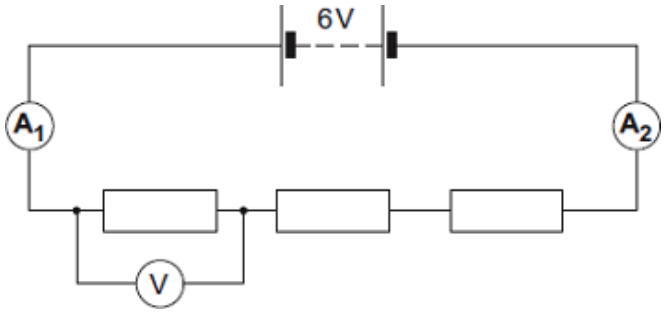

Draw a ring around the correct answer in the box to complete the sentence.

The reading on ammeter A_2 will be

smaller than
equal to
greater than

the reading on ammeter A_1.

(1)
(Total 4 marks)

##

The diagram shows a motor, connected to a 240 V supply, driving a water pump. The ammeter reads 5.0 A.

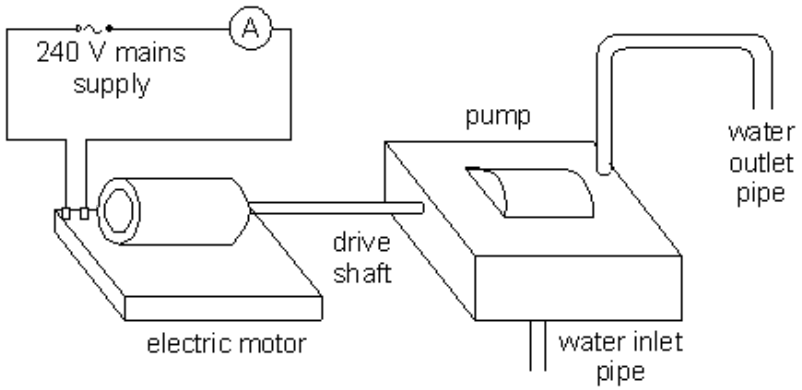

(a) How much charge flows through the motor in one minute? Give the unit.

.....

.....

1 mark

(b) (i) What is the resistance of the motor? Give the unit.

.....

.....

1 mark

(ii) What is the power of the motor? Give the unit.

.....

.....

1 mark

(c) (i) The motor and pump together have an efficiency of 50% (0.5). How much energy is given to the water every second? Give the unit.

.....

1 mark

(ii) The pump has to raise the water up to a vertical height of 12 m. What mass of water will the pump raise each second? Give the unit. The value of g is 10 N/kg.

.....

.....

1 mark

Maximum 5 marks

Q8. The diagram below shows apparatus used for the electrolysis of dilute sulphuric acid.

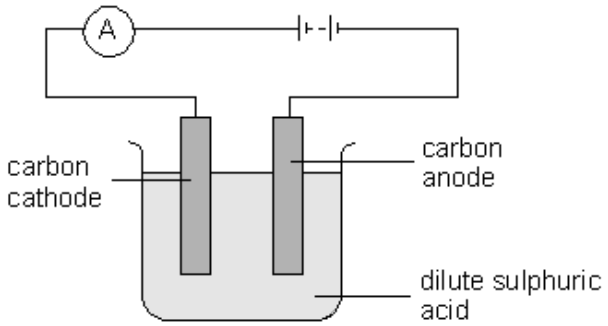

(a) Hydrogen molecules are formed at the cathode from hydrogen ions. Give a balanced ionic equation for this reaction. State symbols are not required.

Use the symbol H^+ for a hydrogen ion and e^- for an electron.

.....

2 marks

(b) The ammeter shows that there is a current.

(i) State in terms of electrons what is happening in the wires.

.....

1 mark

(ii) Explain how the battery causes the electrons to behave in this way.

.....

.....

1 mark

(c) The carbon anode is replaced by a piece of copper foil. A reaction takes place which may be described by the following equation.

$$Cu\ (s) \rightarrow Cu^{2+}\ (aq) + 2e^-$$

Describe **one** change you would see as a result of this reaction.

.....

.....

1 mark
Maximum 5 marks

Q9. Alice connects four light bulbs for her model house, as shown. She puts the bulbs into the holes in the back wall.

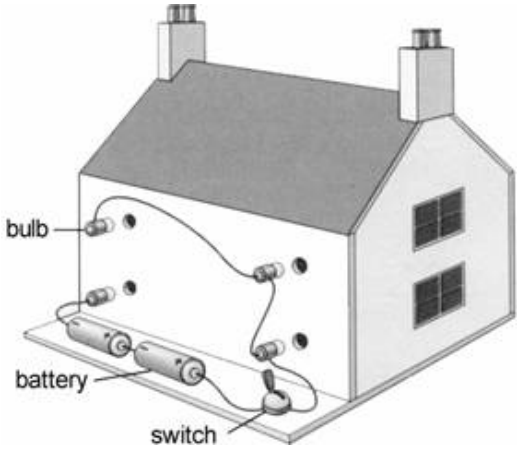

(a) When Alice turns the switch on, the bulbs do **not** light up. The batteries are **not** flat. None of the bulbs is broken.
Why do the bulbs **not** light up?

.....

1 mark

(b) Alice makes the circuit work. When she turns the switch on, the bulbs are **not** very bright.
What must Alice add to the circuit to make the bulbs brighter?

.....

1 mark

(c) The four bulbs in the circuit are the same. Which statement is correct?
Tick the correct box.

Each bulb is the same brightness.	☐	Each bulb is a different brightness.	☐
The bulbs at the top are brighter.	☐	The bulbs at the bottom are brighter.	☐

1 mark

The diagrams show two ways to write the model house.

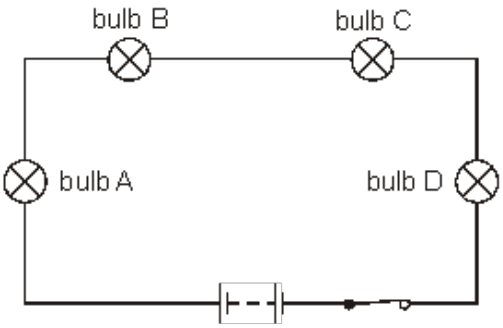

circuit 1

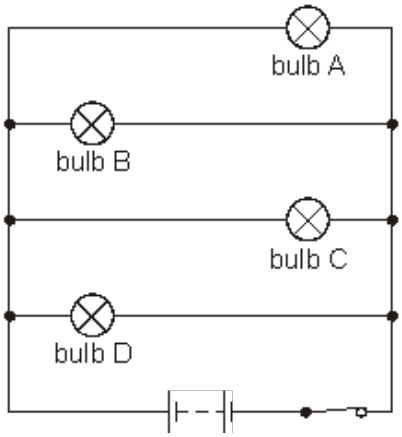

circuit 2

(d) (i) In circuit 1, bulb B breaks and goes out.
What happens to the other bulbs in this circuit?

.....

.....

1 mark

(ii) In circuit 2, bulb C breaks and goes out.
What happens to the other bulbs in this circuit?

.....

.....

1 mark

(e) In circuit 2, Alice adds another switch so that she can turn bulb A off while the other bulbs stay on.
Write the letter S on circuit 2 to show where Alice should add the switch.

1 mark
Maximum 6 marks

Q10. Gary uses the following circuit to operate the electric motor of his model crane.

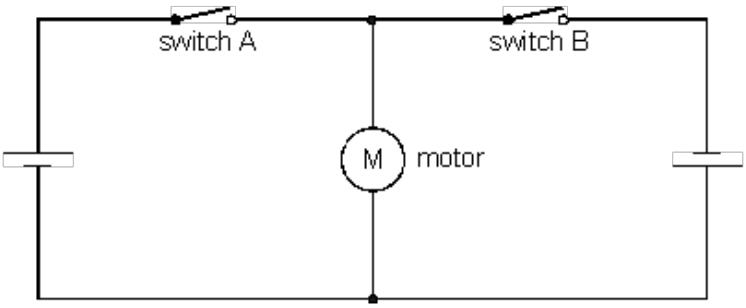

Look carefully at the way Gary has connected the two cells.
When he closes switch A the motor runs and the crane lifts a load.

(a) Gary opens switch A and closes switch B.

Describe what happens to the motor.

.....

.....

1 mark

(b) Gary closes both switches, A and B. Describe what happens to the motor.

.....

1 mark

(c) Both switches should **not** be closed at the same time. Explain why.

.....

.....

1 mark

(d) Gary puts a resistor into his circuit as shown.

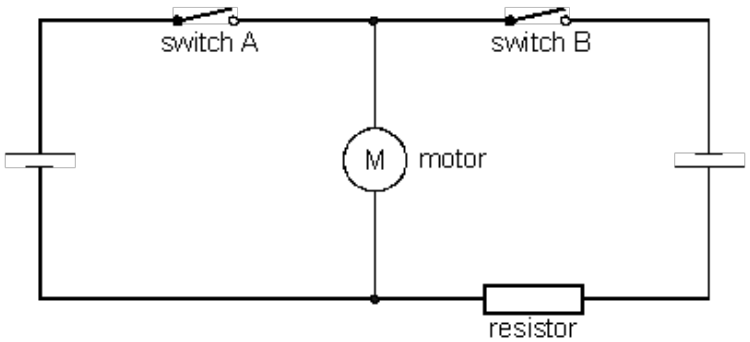

What difference does the resistor make to the motor:

(i) when switch A is closed and switch B is open?

.....

.....

1 mark

(ii) when switch A is open and switch B is closed?

.....

.....

1 mark
Maximum 5 marks

Q11. The diagram shows an exhibit at a science museum. It has six blocks of metal connected to a voltmeter.

(a) **On the lines on the diagram**, write the chemical symbols for magnesium and copper.

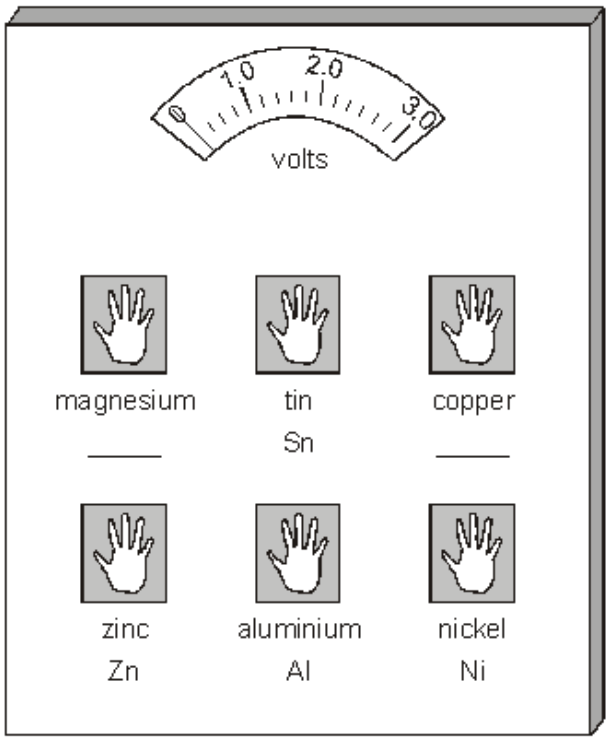

2 marks

(b) When visitors place their hands on two blocks of metal at the same time, there is a reading on the voltmeter.
Some examples are shown in the table.

hands placed on	reading on voltmeter (volts)
magnesium + tin	2.1
magnesium + copper	2.5
magnesium + zinc	1.5
magnesium + aluminium	0.6
magnesium + nickel	2.0

The reading on the voltmeter depends on the reactivity of the two metals touched.
The bigger the difference in reactivity, the higher the reading on the voltmeter.

(i) Magnesium is the most reactive of these metals.
Which metal is the least reactive?

.....

1 mark

(ii) If two blocks of magnesium are used in the experiment, instead of two different metals, what would the voltmeter read?

..... volts

Explain your answer.

.....

.....

2 marks

(iii) Look at the voltmeter readings in the table.
On which **two** metals, other than magnesium, would a person put their hands to give the lowest reading on the voltmeter?

..... and .....

1 mark
maximum 6 marks

Q12. Some pupils made an electric cell using two different metals and a lemon.
They put strips of copper and zinc into a lemon and connected them to the terminals of an electric clock.

(a) Look at the photograph.

What evidence is there that they have made an electric cell?

.....

1 mark

(b) The pupils had pieces of copper, zinc, iron and magnesium and some lemons. They wanted to find out which pair of metals made the cell with the biggest voltage.

What equipment should they use to measure the voltage of their cells?

.....

1 mark

(c) In their investigation they used different pairs of metals.

Give **one** factor that they should keep the same.

.....

1 mark

(d) The pupils measured the voltage produced by different pairs of metals. Their results are recorded below.

	voltage produced by each pair of metals (volts)			
	magnesium	zinc	iron	copper
copper	1.7	0.9	0.8	0
iron	1.3	0.1	0	-
zinc	0.8	0	-	-
magnesium	0	-	-	-

Which pair of metals made the cell with the biggest voltage?

..... and .....

1 mark

(e) Look at the results in the table above.

Why should the pupils **not** use pairs of the same type of metal for the clock?

.....

.....

1 mark
maximum 5 marks