Q1. The diagram shows two buses. Bus A is empty. Bus B contains bags of sand upstairs to represent passengers.

Each bus has been tilted as far as it can without falling over.

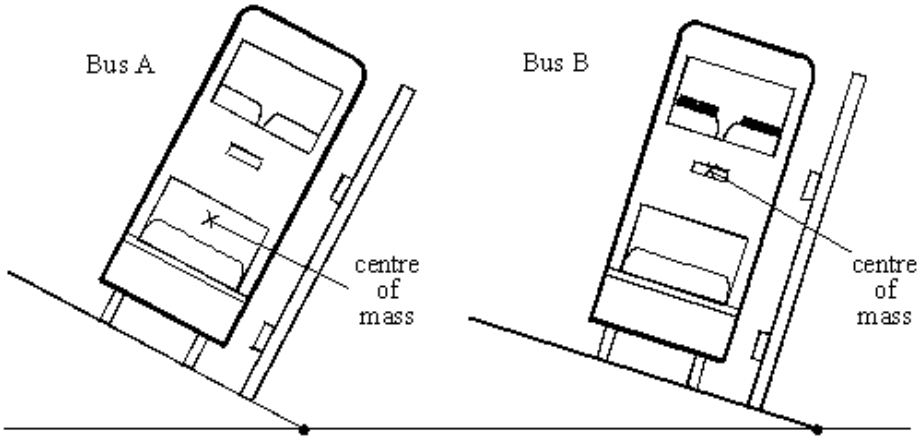

(a) Each bus will topple over if it is tilted any further.

Explain, in as much detail as you can, why this will happen.

(You can draw on one of the diagrams as part of your answer if you want to.)

.....

.....

.....

(2)

(b) What difference does it make to the stability of the bus when the upper deck is full of "passengers"? Explain your answer as fully as you can.

.....

.....

.....

(3)

(c) Why are the bags of sand in bus B only put upstairs?

.....

.....

(1)
(Total 6 marks)

Q2. The diagram shows a simple machine for lifting water from a river.

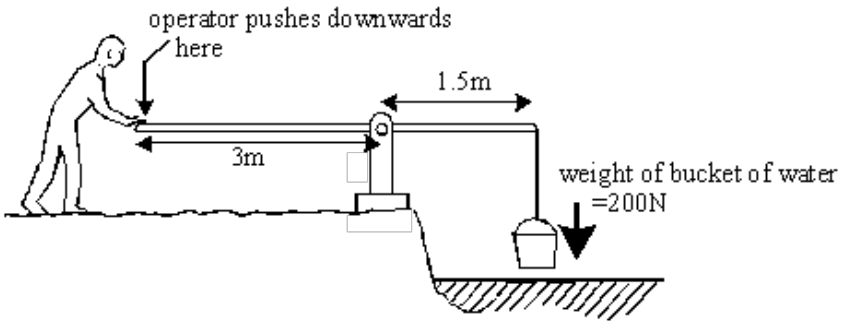

(a) Calculate the turning force (moment) of the bucket of water.

(Show your working.)

.....

.....

.....

Answer ..... Nm (newton metre)

(2)

(b) What can you say about the size of downwards force the operator must use to balance the moment of the bucket of water?

(Explain your answer, using numbers if you can.)

.....

.....

.....

.....

(4)
(Total 6 marks)

Q3. The diagram below shows an outline of a balance. The balance is used to weigh lorries. A fraction of the weight of a lorry is used as the load on the right side of the pivot.

A standard weight W is moved along the arm until the weight of the load is balanced.

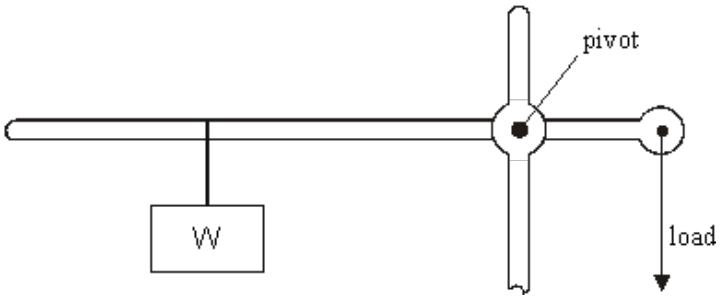

(a) As the weight W is moved away from the pivot it can support a heavier load. Why is this?

.....

.....

(2)

(b) (i) The weight W is 100 N. When it is 0.2 m from the pivot it balances the load. Calculate the moment of the weight W about the pivot.

.....

.....

Answer ..... Nm

(2)

(ii) The load is one hundredth of the weight of the lorry and is 0.02 m from the pivot. Calculate the weight of the lorry.

.....

.....

Answer ..... N

(2)

(Total 6 marks)

Q4. (a) The diagram shows three similar toys. Each toy should be able to balance on a narrow rod. The arrows show the direction in which the weight of the toy acts.

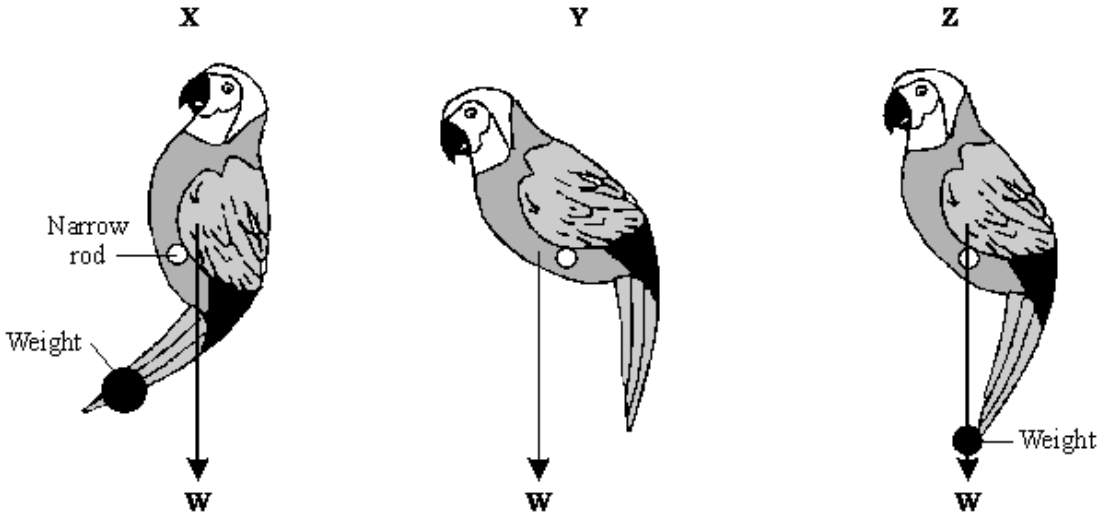

Only one of the toys balances on the rod, the other two fall over. Which **one** of the toys is balanced? Explain the reason for your choice.

.....

.....

.....

.....

(3)

(b) The diagram shows a simple toy. Different animal shapes can be positioned so that the 50 cm rod balances horizontally.

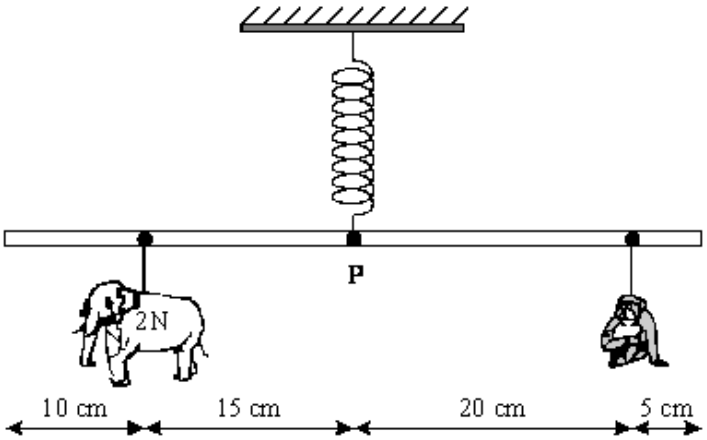

(i) Use the following equation to calculate the moment exerted by the elephant shape of weight 2N about the pivot **P**. Show clearly how you work out your answer and give the unit.

moment = force × perpendicular distance from pivot

.....

.....

Moment = ...

(3)

(ii) Use the following relationship to calculate the weight of the monkey shape.

total clockwise moment = total anticlockwise moment

.....

.....

Weight = ... N

(2)

(c) The graph shows how the length of the spring changes as the total weight of the different animal shapes change.

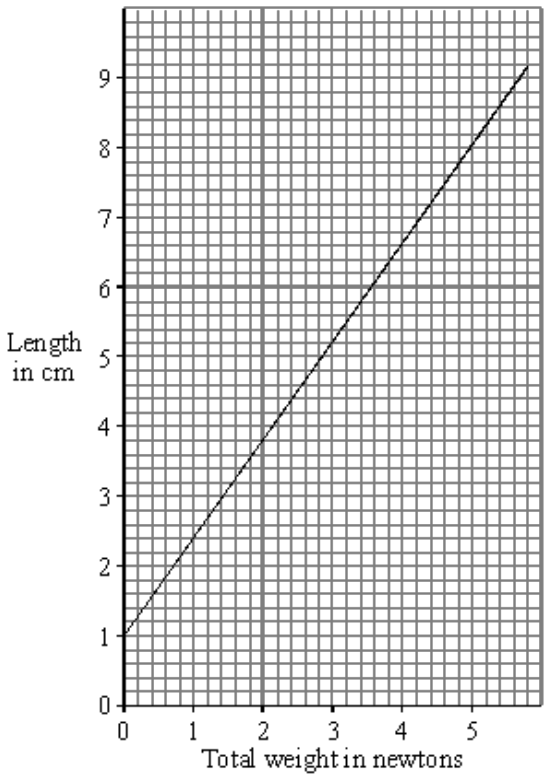

Use the graph to find how much the spring extends when the elephant shape and the monkey shape are hung from the rod. Show how you get your answer.

.....

.....

Extension of spring = ... cm

(2)

(Total 10 marks)

Q5. For part of the ride the cyclist pushed on the pedals with a constant vertical force of 300 N. The simplified diagrams show the pedals in three different positions.

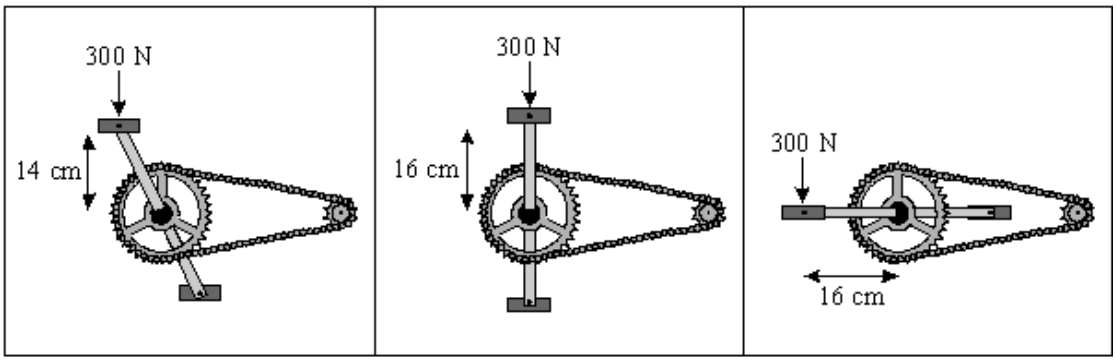

A **B** **C**

(i) Which position, **A**, **B**, or **C**, gives the largest moment on the pedal?

.....

(1)

(ii) Use the following equation to calculate, in Newton metres, the size of the largest moment on the pedal.

moment = force × perpendicular distance from pivot

.....

.....

Moment = ... Nm

(2)
(Total 3 marks)

Q6. (a) The diagrams show a windsurfer pulling up the sail of a sailboard. The mast pivots at point P.

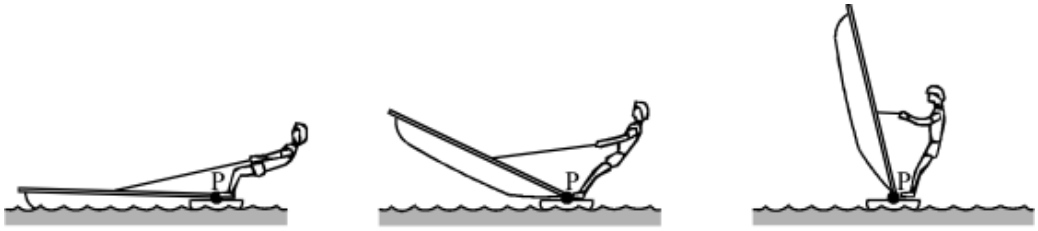

A **B** **C**

In which position, **A**, **B** or **C** must the windsurfer pull with the largest force? Give a reason for your answer.

.....

.....

.....

(2)

(b) Once the mast is upright, the windsurfer and the sailboard are *in equilibrium.*

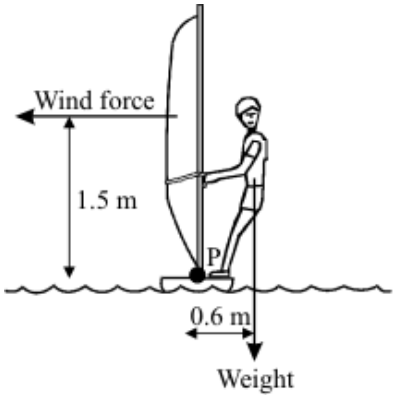

(i) What does *in equilibrium* mean?

.....

.....

(1)

(ii) The weight of the windsurfer is 700 newtons. Use the equation below to calculate the moment exerted by the windsurfer on the sailboard. Show clearly how you work out your answer.

moment = force × perpendicular distance from pivot

.....

.....

Moment = ... Nm

(2)

(iii) Use the relationship below to calculate the horizontal force of the wind on the sail. Show clearly how you work out your answer.

total clockwise moment = total anticlockwise moment

.....

.....

Force = ... N

(2)

(c) As the wind speed increases the windsurfer leans further out from the sailboard.

This position allows the windsurfer and sailboard to stay in equilibrium. Explain why.

.....

.....

.....

.....

.....

(3)
(Total 10 marks)

Q7. (a) The diagram shows a lifebelt. It is hanging freely from hook **Y**.

(i) On the diagram, mark with an **X** the point where you think the centre of mass of the lifebelt will be.

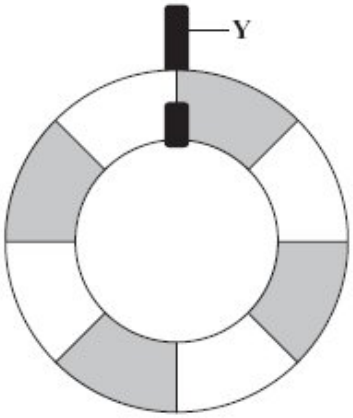

(1)

(ii) Explain why you have chosen this point.

.....

.....

.....

(2)

(b) The drawing shows Susan on a diving board. She is 1.5 metres from point **P** and she weighs 500 N.

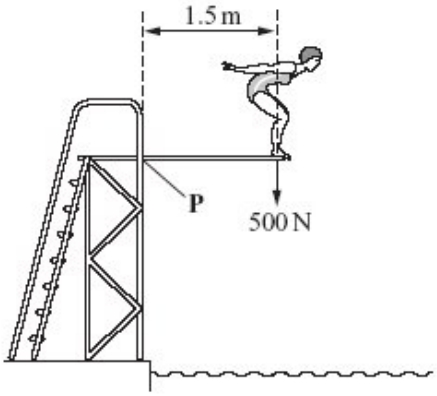

Calculate her moment (turning effect) about point **P**.
Show clearly how you work out your answer and give the unit.

.....

.....

Moment about **P** = ...

(3)

(c) Susan has a case with wheels.

When she packs this case, she puts the heaviest items at the end where the wheels are. This means that the heaviest items are less likely to crush the other contents and it helps her to find things when she opens the case.

Explain another advantage of packing her case in this way.

To gain full marks in this question you should write your ideas in good English. Put them into a sensible order and use the correct scientific words.

.....

.....

.....

.....

.....

.....

.....

.....

(4)
(Total 10 marks)

Q8. (a) Every object has a *centre of mass*. What is meant by the *centre of mass*?

.....

.....

(1)

(b) The drawing shows a thin sheet of plastic. The sheet is 250 mm wide. Two holes, each with a radius of 2 mm, have been drilled through the sheet.

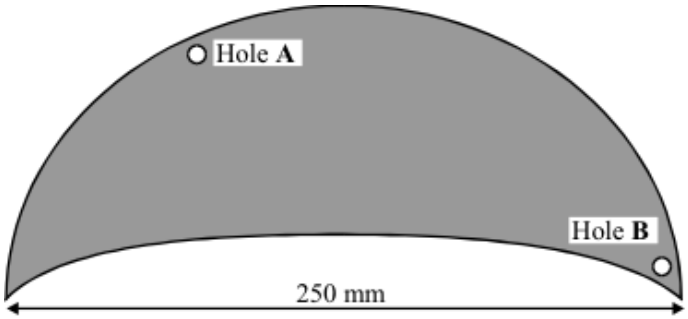

Describe how you could use:

- a clamp and stand
- a steel rod 100 mm long and with a radius of I mm
- a weight on a thin piece of string (= a plumb line)
- a ruler
- a pen which will write on the plastic sheet

to find the centre of mass of the plastic sheet.

To gain full marks in this question you should write your ideas in good English. Put them into a sensible order and use the correct scientific words.

.....

.....

.....

.....

.....

.....

.....

.....

.....

.....

(5)

(c) There is a trapdoor in the ceiling of a house.
The trapdoor weighs 44 N.
The drawing shows a side view of the trapdoor.

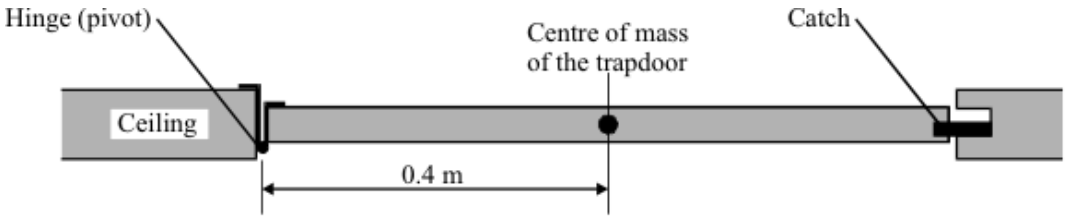

(i) Complete the **three** spaces to give the equation which is used to calculate the turning effect of a force.

..... = ... × perpendicular between ..... line of action and pivot

(1)

(ii) Calculate the turning effect, about the hinge, due to the weight of the trapdoor.

Show clearly how you work out your final answer and give the unit.

.....

.....

Turning effect = ...

(3)
(Total 10 marks)

Q9. The diagram shows a crane which is loading containers onto a ship.

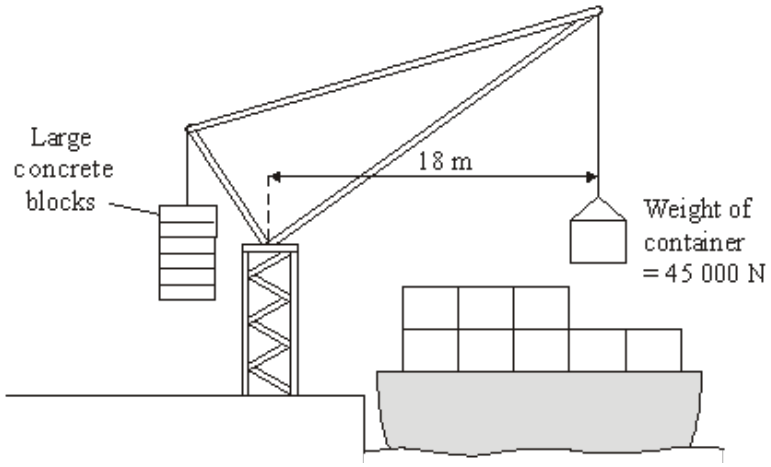

(a) Use the equation in the box to calculate the moment of the container which is being loaded.

moment = force ×	perpendicular distance from the line of action of the force to the axis of rotation

Show clearly how you work out your answer and give the unit.

.....

.....

Moment of the container = ...

(3)

(b) Suggest and explain the purpose of the large concrete blocks.

.....

.....

.....

.....

.....

(3)
(Total 6 marks)

Q10. A spanner gives a turning effect to undo a nut.

(a) Complete the sentence.

The turning effect of a force is called the ..... of the force.

(1)

(b) The diagram shows a spanner being used.

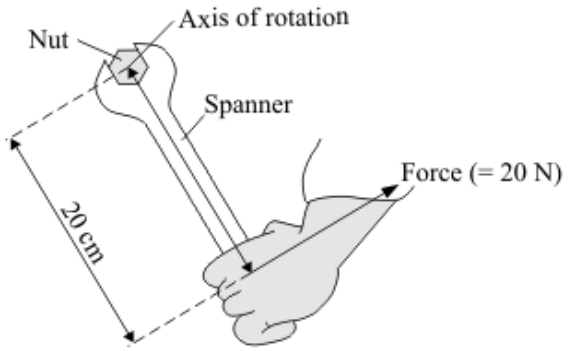

Use the equation in the box to calculate the spanner's turning effect in newton metres.

turning effect = perpendicular distance from the line of action of the force to the axis of rotation

Show clearly how you work out your answer.

.....

.....

Turning effect = ... Nm

(2)

(c) Give **two** ways in which you can increase the spanner's turning effect.

1 .....

2 .....

(2)
(Total 5 marks)

Q11. The diagram shows a small mobile crane. It is used on a building site.

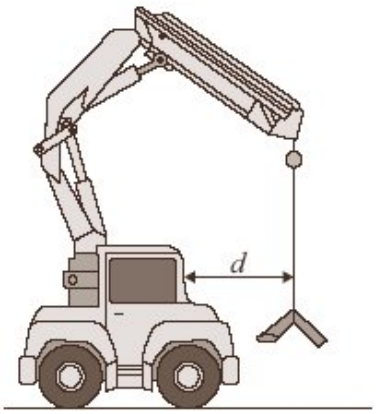

The distance, *d*, is measured to the front of the cab.

The table shows information from the crane driver's handbook.

Load in kilonewtons (kN)	**Maximum safe distance, *d*, in metres (m)**
10	6.0
15	4.0
24	2.5
40	1.5
60	1.0

(a) What is the relationship between the load and the maximum safe distance?

.....

.....

.....

(2)

(b) The crane driver studies the handbook and comes to the conclusion that a load of 30 kN would be safe at a distance, *d*, of 2.0 metres.

Is the driver correct?

Explain your answer.

.....

.....

.....

.....

(2)

(c) What is the danger if the driver does not follow the safety instructions?

.....

.....

(1)

(d) How should the data in the table have been obtained?

Put a tick (✓) in the box next to your answer.

average results from an opinion poll of mobile crane drivers	☐
copied from a handbook for a similar crane	☐
results of experiments on a model mobile crane	☐
results of experiments on this mobile crane	☐

(1)
(Total 6 marks)

Q12. (a) The diagram shows a gardener using a steel bar to lever a tree stump out of the ground.

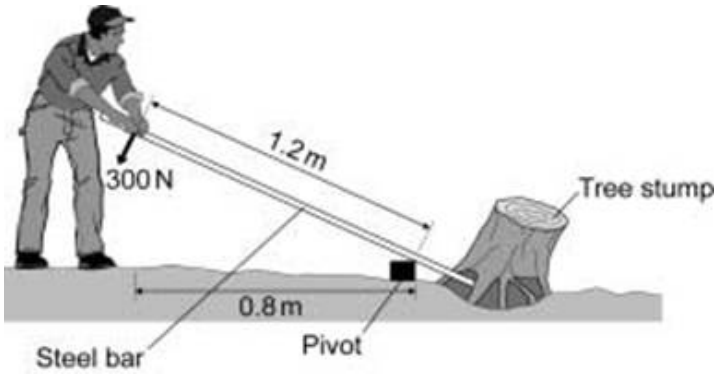

When the gardener pushes with a force of 300 N the tree stump just begins to move.

Calculate the moment produced by the gardener on the steel bar.

Write down the equation you use, and then show clearly how you work out your answer and give the unit.

.....

.....

.....

.....

.....

.....

Moment = ...

(4)

(b) Using a longer steel bar would have made it easier for the gardener to lever the tree stump out of the ground.

Explain why.

.....

.....

.....

.....

.....

(3)
(Total 7 marks)

Q13. (a) A student investigates the moment of a force.

(i) What does the word *moment* mean in this sentence?

.....

.....

(1)

(ii) The diagram shows how she sets up her apparatus.

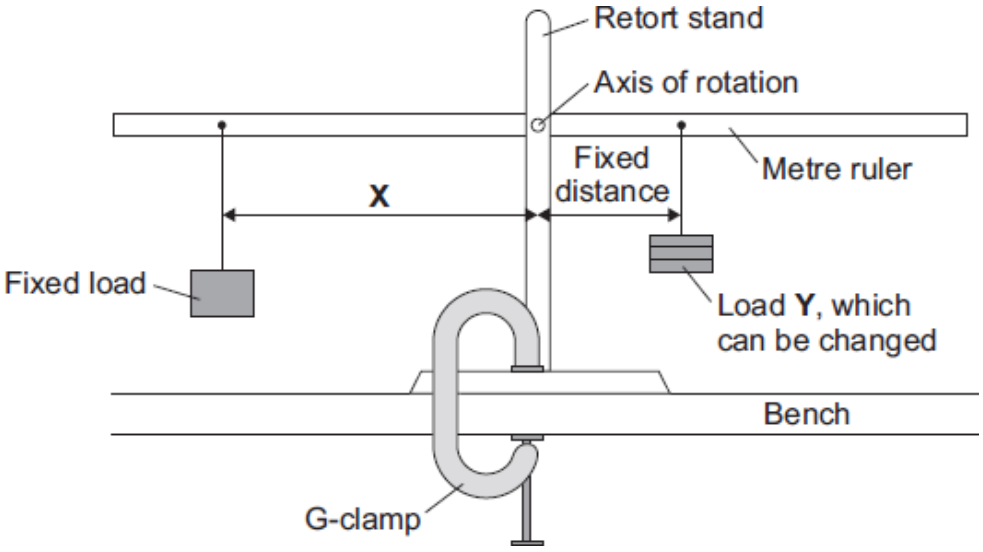

Suggest the purpose of the G-clamp.

.....

.....

(1)

(iii) A horizontal rod fits into a hole at the centre of the metre ruler. This is the axis of rotation. The student changes the load **Y** and adjusts the distance **X** until the metre ruler is horizontal. She takes six pairs of measurements which are shown in the table.

Load Y in newtons	**Distance X in centimetres**
1	7
2	14
3	21
4	28
5	35
6	42

Explain fully how distance **X** varies with load **Y**.

.....

.....

.....

.....

.....

(2)

(iv) The weight of the ruler can be ignored in this experiment.

Which statement gives the reason why?

Put a tick (✓) in the box next to your answer.

The weight of the ruler is so small it is negligible. ☐

The centre of mass of the ruler is at the axis of rotation. ☐

The ruler is a symmetrical object. ☐

(1)

(b) In the summer, a town council fits hanging baskets to some of its lamp posts.

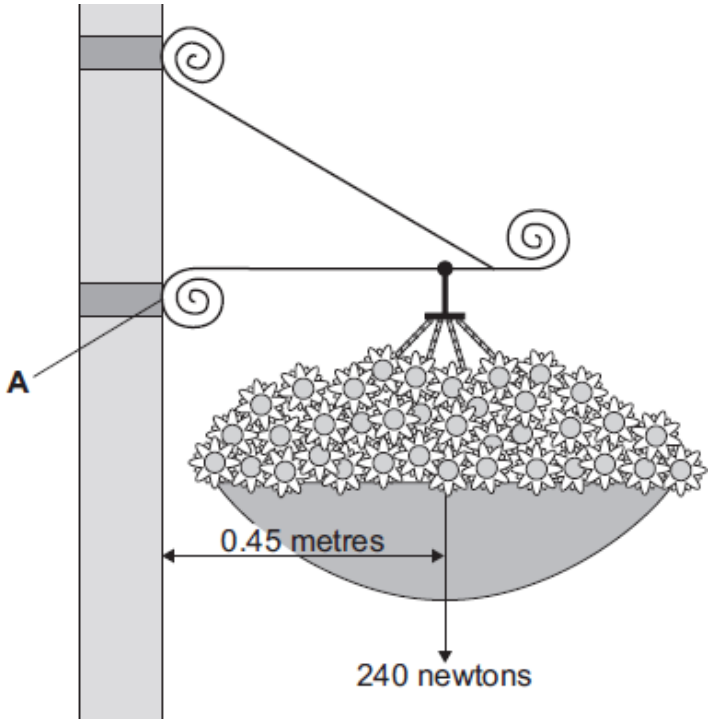

Use the information in the diagram and the equation in the box to calculate the moment produced by the weight of the hanging basket about an axis through point **A**.

moment	=	force	×	perpendicular distance from the line of action of the force to the axis of rotation

Show clearly how you work out your answer **and** give the unit.

.....

.....

.....

.....

Moment =.....

(3)
(Total 8 marks)

Q14. The drawing shows a plastic toy which can stand on its feet.

(a) (i) Draw an **X** on the diagram so that the centre of the **X** marks the likely position of the centre of mass of the toy.

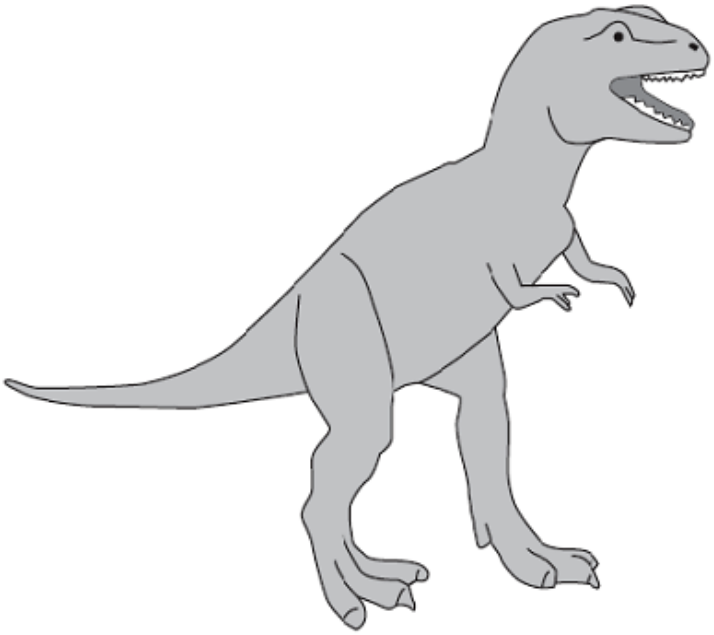

(1)

(ii) Explain the reason for your choice in part (a)(i).

.....

.....

(1)

(b) Suggest **two** ways in which the design of the toy could be altered to make the toy more stable.

1 .....

.....

2 .....

.....

(2)
(Total 4 marks)