Q1. The table shows how much carbon dioxide is produced when you transfer the same amount of energy by burning coal, gas and oil.

	Carbon dioxide (based on oil = 100)
coal	150
gas	75
oil	100

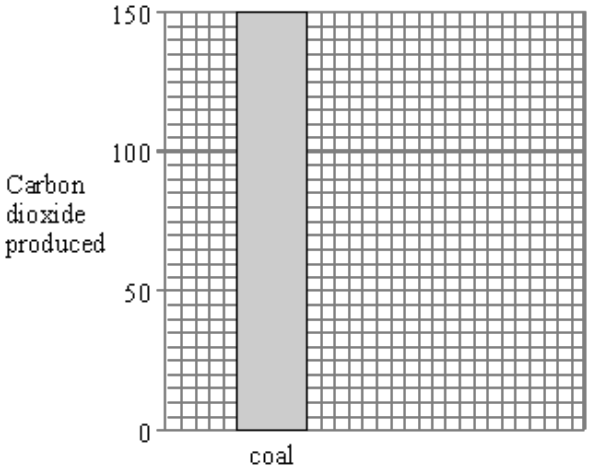

(a) Use the information from the table to complete the bar-chart.

(3)

(b) The second bar-chart shows how much sulphur dioxide is produced by burning the same three fuels.

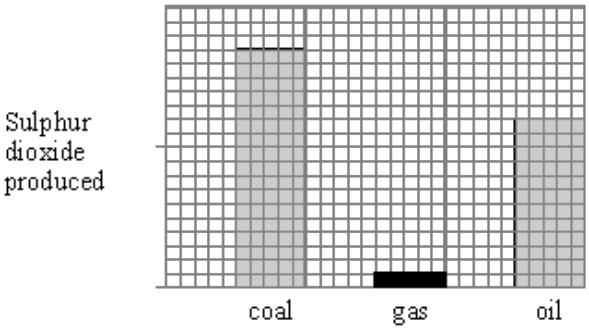

Compare the amount of sulphur produced by burning gas with the amount produced by burning coal.

.....

.....

(2)

(c) (i) Coal and oil produce carbon dioxide and sulphur dioxide when they burn. What elements must they contain?

.....

.....

(2)

(ii) Burning fuels also produce nitrogen oxides, even though the fuels contain no nitrogen. Explain why this happens.

.....

.....

(2)
(Total 9 marks)

##

The table gives some information about a family of molecules in crude oil.

NUMBER OF CARBON ATOMS IN MOLECULE	MASS OF MOLECULE (atomic units)
1	16
2	30
4	58

(a) Show information from the table in the most appropriate way on the grid.

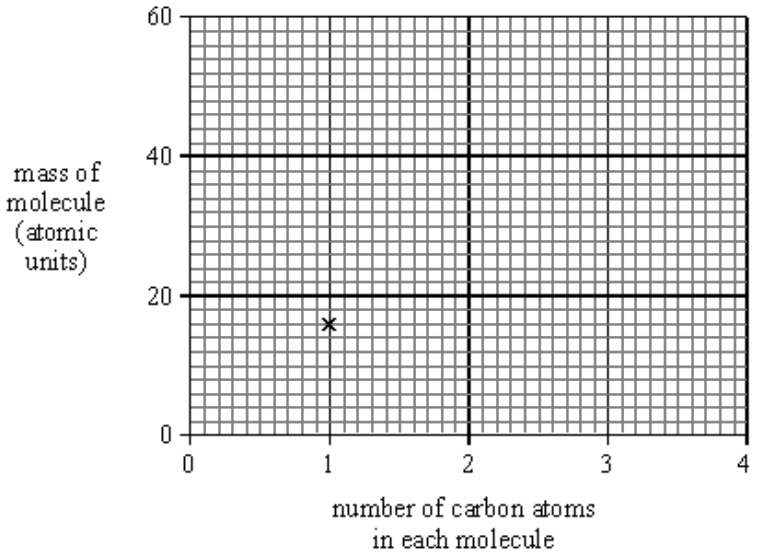

(3)

(b) What is the mass of a molecule with three carbon atoms?

.....

(1)

(c) The other atoms in each molecule are all hydrogen atoms.
What family of substances do all the molecules belong to?

.....

(1)

(d) The mass of a carbon atom is 12 atomic units.
The mass of a hydrogen atom is 1 atomic unit.

So the molecule with one carbon atom has four hydrogen atoms.
Its formula is CH_4.

Write down the formula:

(i) of the molecule with two carbon atoms .....

(ii) of a molecule from the same family with five carbon atoms .....

(2)
(Total 7 marks)

Q3. A student is using a spirit burner to heat some water.

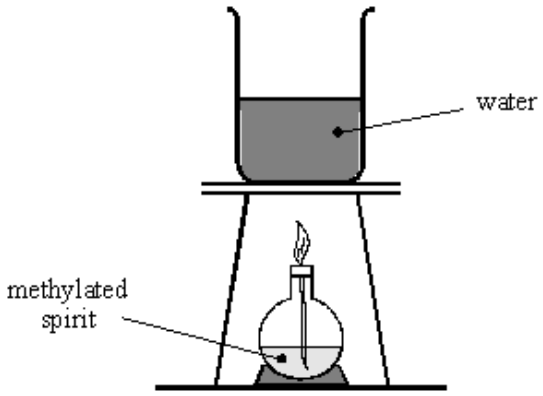

(a) Complete these sentences.

Substances like methylated spirit which we burn to give out energy, are called

..... . The energy is given out as ..... energy.

(2)

(b) Choose a word from this list to complete the sentence below.

gases **liquids** **solids**

The methylated spirit seems to disappear as it burns.

The new substances produced during burning are mainly .....

(1)
(Total 3 marks)

Q4. The structural formulae of two saturated hydrocarbons are shown below.

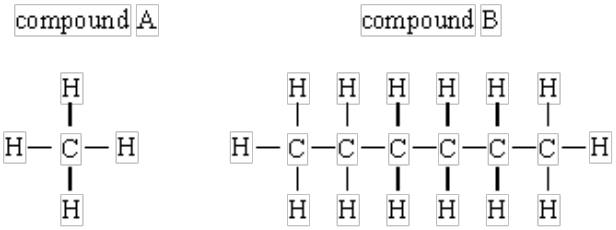

Describe **two** ways in which they will differ in their physical properties.

1 .....

.....

2 .....

.....

(Total 2 marks)

Q5. Here is the word equation for a chemical reaction.

methane + oxygen → water + carbon dioxide

Write down everything that the word equation tells you about the reaction.

.....

.....

.....

.....

.....

.....

(Total 4 marks)

Q6. This experiment shows a candle burning then going out.

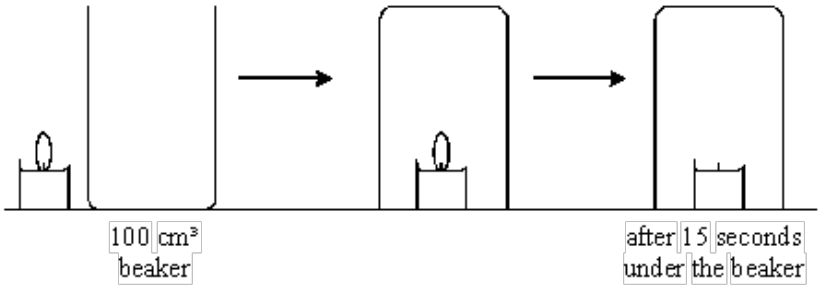

(a) Choose words from this list to complete the sentences in parts (i) and (ii) below.

air carbon dioxide hydrogen nitrogen oxygen

(i) When the candle wax is burning it is reacting with ..... from the ..... .

(2)

(ii) One product of the reaction is .....

(1)

(b) Complete the following sentence.

In another experiment a 200 cm^3 beaker is used. The candle will then burn for about ..... seconds.

(1)
(Total 4 marks)

Q7. In a car engine petrol burns in oxygen from the air. Two of the gases in the exhaust fumes are carbon dioxide and water vapour.

This indicates that petrol contains the elements ..... and .....

(Total 2 marks)

Q8. Petrol burns in oxygen from the air in a car engine.

Two of the gases in the exhaust fumes are carbon dioxide and water vapour.

This indicates that petrol contains the elements ..... and ..... .

(Total 2 marks)

Q9. The table shows some of the products which are obtained from the fractional distillation of crude oil.

Fraction	Nature of products
A	a mixture of gases
B	a mixture of low boiling point liquids
C	a mixture of high boiling point, yellow liquids

(a) For each of the fractions **A–C** give the name of an organic substance which could be part of the fraction and state a use for it.

A .....

Use .....

(2)

B .....

Use .....

(2)

C .....

Use .....

(2)

(b) When burned in excess air, all the substances in fractions **A–C** form the same two compounds.

Give the **formulae** of these two compounds.

..... and .....

(1)

(Total 7 marks)

Q10. Crude oil contains many different hydrocarbons.

(i) Which formula in the list represents a hydrocarbon?
Draw a **ring** around the correct formula.

CO_2 **$C_6H_{12}O_6$** **C_8H_{18}** **H_2O**

(1)

(ii) Which word from the list below best describes crude oil?
Draw a **ring** around the correct word.

alloy compound element mixture

(1)

(iii) Choose, from the list below, words to complete the passage about the separation of the hydrocarbons in crude oil by fractional distillation.

atoms **burned** **condensed** **evaporated** **filtered**

fractions **ions** **molecules** **neutralised**

During fractional distillation the many hydrocarbons in crude oil are separated

into ..... each of which contains ..... with a

similar number of carbon ..... .

To do this the oil is first ..... and then .....

at a number of different temperatures.

(5)
(Total 7 marks)

Q11. (a) Burning fuels changes the Earth's atmosphere. The new substances produced are mainly gases.
The following is a list of types of reaction.

combustion **cracking** **electrolysis**

fermentation **neutralisation** **reduction**

Choose, from the list, the word which has the same meaning as burning.

.....

(1)

(b) The table shows the gases formed when four fuels, **A** to **D**, are completely burned in air.

FUEL	GAS FORMED ON BURNING		
	CARBON DIOXIDE CO_2	WATER VAPOUR H_2O	SULPHUR DIOXIDE SO_2
A	✓	✓	✗
B	✗	✓	✗
C	✓	✗	✗
D	✓	✓	✓

Which fuel, **A** to **D**, is hydrogen, H_2? .....

(1)
(Total 2 marks)

Q12. (a) Crude oil is a mixture of many compounds. Most of the compounds consist of molecules made only of carbon and hydrogen. Choose **one** word from the list below to complete the sentence.

carbohydrates **carbonates** **hydrocarbons** **hydrogencarbonates**

Compounds made only of carbon and hydrogen are called .....

(1)

(b) The fractions contain molecules with similar numbers of carbon atoms. The main fractions are shown in the table below.

NAME OF FRACTION	NUMBER OF CARBON ATOMS IN MOLECULES
petroleum gases	1 to 4
gasoline	4 to 12
naphtha	7 to 14
kerosene	11 to 15
diesel oil	14 to 19
lubricating oil	18 to 30
residue	more than 30

Naphtha burns more easily than diesel oil.
Explain why.

.....

.....

.....

(1)
(Total 2 marks)

Q13. The diagram below shows a camping stove used by some students.

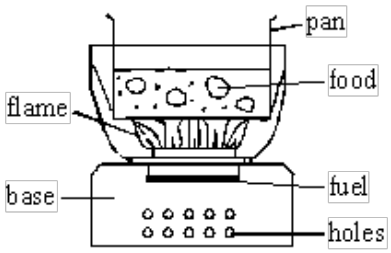

A student wrote the report below to explain how the stove works. The report has had some words removed. Complete the report using words from the list.

air	chemical change	liquids	physical change
argon	gases	nitrogen	solid
carbon dioxide	heat energy	oxygen	water vapour

To use the stove a fuel called methylated spirits is poured into the burner and lit with a match.

The holes in the base let ..... into the stove. This contains the gas called

..... which is needed for the fuel to burn.

When the fuel burns, new substances are formed. This shows that a .....

takes place.

When all of the methylated spirits has burned nothing is left in the burner. This shows that

the new substances must all be ..... .

Methylated spirits contains carbon and hydrogen. When the fuel burns the carbon is changed

into ..... .

The hydrogen is changed into ..... .

When the fuel burns it gives out ..... which cooks the food in the pan.

(Total 7 marks)

Q14. Crude oil is a mixture of many *saturated hydrocarbons*. They can be separated into *fractions* by the process of fractional distillation.

State what is meant by:

(i) *hydrocarbon*. .....

.....

(2)

(ii) *saturated*. .....

.....

(1)

(iii) *fraction*. .....

.....

(1)

(Total 4 marks)

Q15. Methane CH_4 contains the elements carbon and hydrogen only. A student wanted to find out which new substances are produced when methane is burned. The student set up the apparatus shown below.

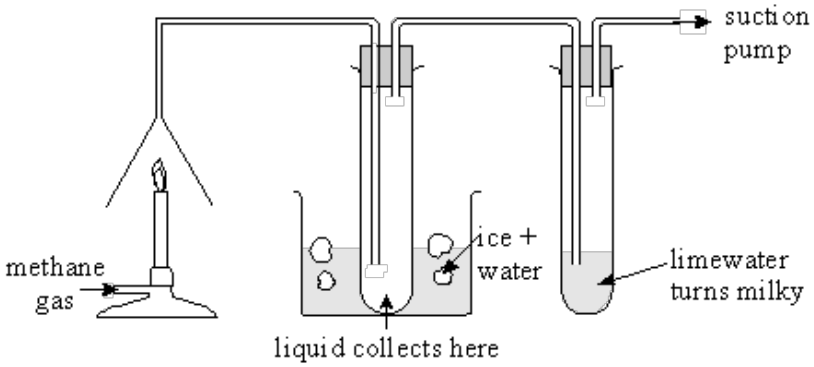

(a) Which gas in the air reacts with methane when it burns?

.....

(1)

(b) Name the liquid collected.

.....

(1)

(c) Name the gas which turns limewater milky.

.....

(1)

(d) When methane burns an exothermic reaction takes place. What is meant by an exothermic reaction?

.....

.....

(2)
(Total 5 marks)

Q16. (a) Draw a suitable graph to enable you to estimate the boiling point of the hydrocarbon called nonane which has a molar mass of 128.

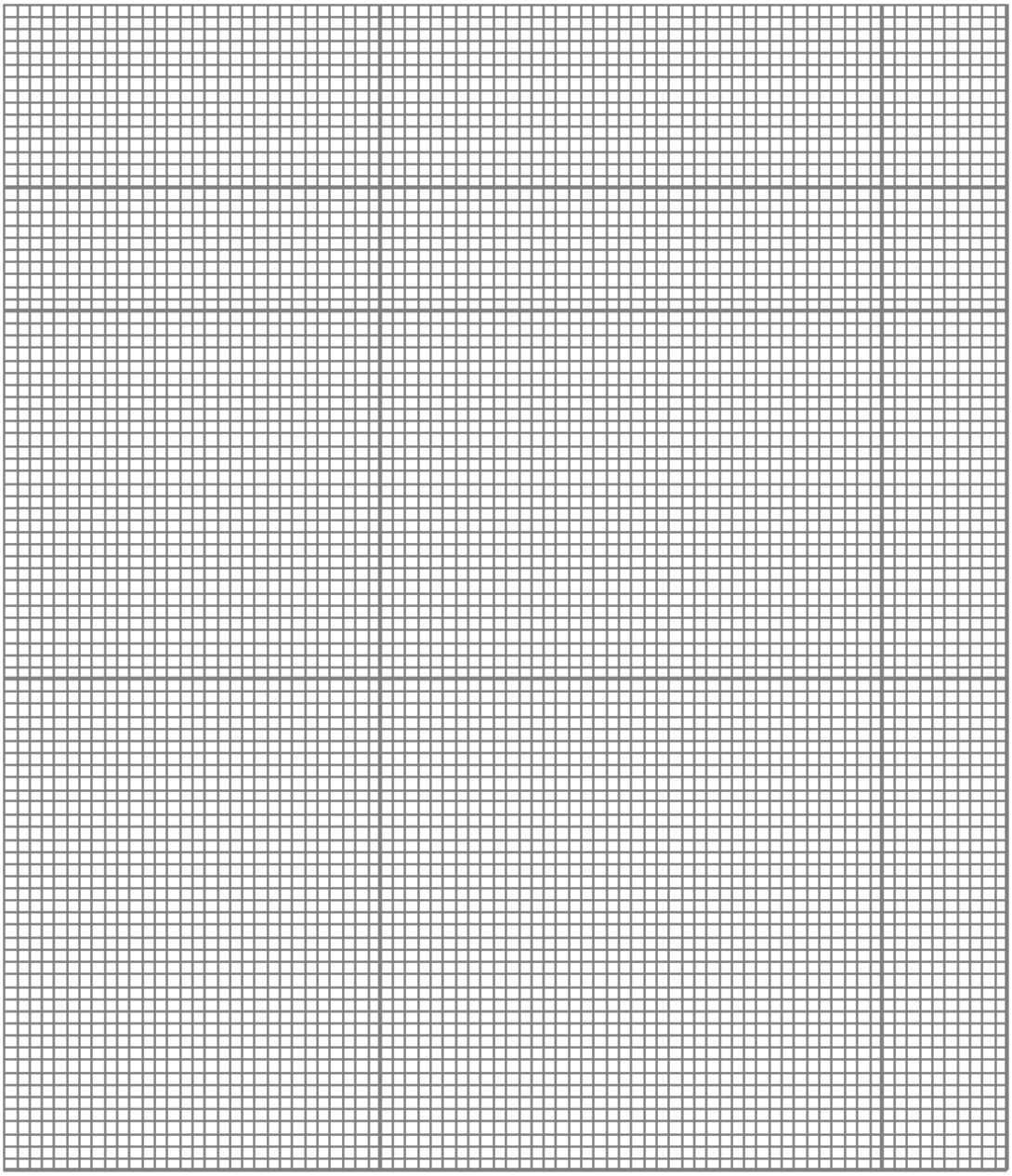

Boiling point of nonane = ... ^{o}C

(6)

(b) Give a possible use of nonane.

.....

(1)

(Total 7 marks)

Q17. The diagram below shows a bunsen burner.

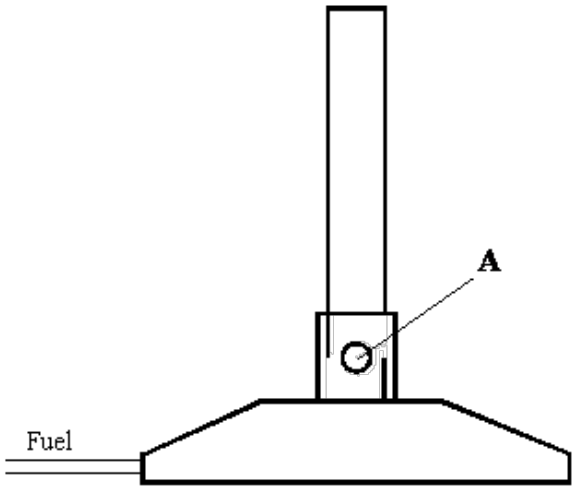

Use words from the list to complete the passage about the Bunsen burner. You may use each word once, more than once or not at all.

air	methane
argon	mechanical energy
carbon dioxide	nitrogen
chemical	physical
electrical energy	potential energy
heat	oxygen
kinetic energy	water vapour

In the Bunsen burner the fuel is mixed with .....

which enters through the hole labelled A.

When the fuel burns it reacts with the gas called .....

and energy is given out as ..... .

The fuel used in the Bunsen burner contains carbon and hydrogen which are changed

during burning into ..... and ..... .

Burning is an example of a ..... change because new

substances are formed.

(Total 6 marks)

Q18. This question is about hydrocarbons.

(a) Use **two** of the words in the box to complete the sentence.

air	finite	organic	renewable	sediment	water

Crude oil is a mixture of hydrocarbons. It was formed from

..... materials that were trapped in

..... over a very long period of time.

(2)

(b) Petrol is separated from crude oil by fractional distillation.

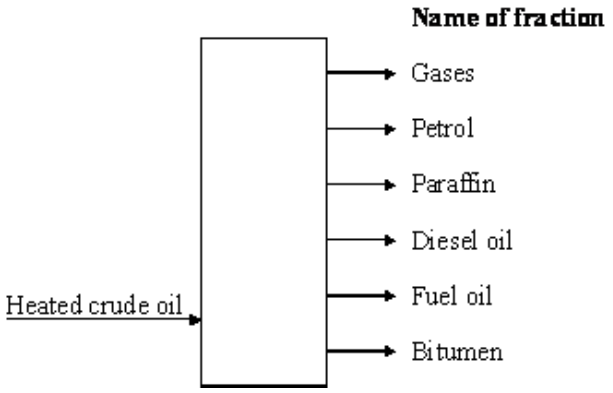

(i) Which fraction has the lowest boiling point?

.....

(1)

(ii) Which fraction has the highest density?

.....

(1)

(c) Some of the fractions containing larger hydrocarbon molecules are used to make plastics, such as poly(ethene).

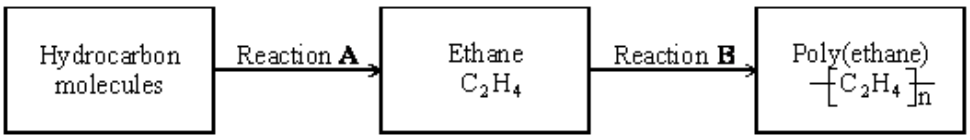

(i) What type of chemical change is Reaction **A**?

.....

(1)

(ii) Explain what happens in Reaction **B**.

.....

.....

.....

.....

(2)

(d) Natural gas contains the hydrocarbon called methane. Some water heaters use methane as a fuel. People could die from breathing the fumes produced by heaters that have not been checked and serviced. Explain how these fumes are produced and why they are dangerous.

.....

.....

.....

.....

.....

.....

.....

(3)
(Total 10 marks)

Q19. The high demand for petrol (octane) can be met by breaking down longer hydrocarbons, such as decane, by a process known as cracking.

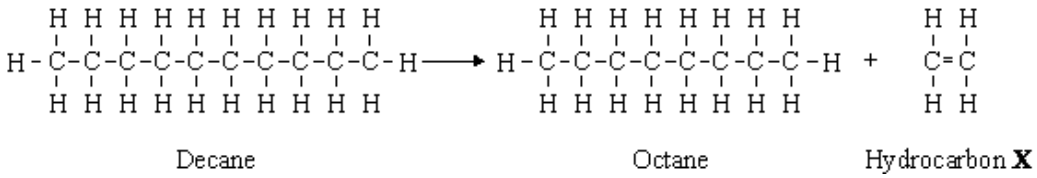

(a) Apart from heat, what is used to make the rate of this reaction faster?

.....

(1)

(b) Octane is a *hydrocarbon.*

(i) What does *hydrocarbon* mean?

.....

.....

(1)

(ii) Give the molecular formula of octane.

.....

(1)

(c) The hydrocarbon **X** is used to make poly(ethene).

(i) What is the name of **X**?

.....

(1)

(ii) What is the name of the process in which **X** is changed into poly(ethene)?

.....

(1)
(Total 5 marks)

Q20. The table gives some data about four fuels, **A**, **B**, **C** and **D**.

Fuel	**Cost in pence per 100 g**	**Energy in kJ per 100 g**	**Energy per penny in kJ**	**Gas (✓) formed on burning**		
				Carbon dioxide	**Sulphur dioxide**	**Water vapour**
A	6.0	4 800	800	✓		✓
B	4.0	1 200	300	✓		✓
C	3.5	2 800	800	✓	✓	✓
D	18.0	14 400	800			✓

A student was asked to use the data in the table to compare these four fuels, and then place the fuels in an order.

The order that the student chose was:

D best fuel
A ↑
C
B worst fuel

Use the information in the table to suggest reasons why the student chose this order.

To gain full marks in this question you should write down your ideas in good English. Put them into a sensible order and use the correct scientific words.

.....

.....

.....

.....

.....

.....

.....

.....

.....

(Total 4 marks)

Q21. The hydrocarbons in crude oil can be separated into useful fractions.

Fraction	**Boiling point in °C**	**Carbon chain length**	**Relative % in crude oil**	**Relative % demand**
Naphtha	20–180	5–9	10	20
Gasoline (petrol)	20–200	5–10	10	20
Kerosene (paraffin)	180–260	10–16	15	23
Diesel	260–340	14–20	20	25
Fuel oil	370–600	20–70	45	12

(a) Why does gasoline (petrol) have a lower boiling point than fuel oil?

.....

.....

(1)

(b) Suggest why gasoline (petrol) costs more than fuel oil.

.....

.....

.....

.....

(2)

(c) Describe how fuel oil can be changed into gasoline (petrol).

.....

.....

.....

.....

(2)
(Total 5 marks)

Q22. Crude oil is a resource from which fuels can be separated.

(a) The name of the main fuel fractions and one of the hydrocarbons in each fraction are shown in the table.

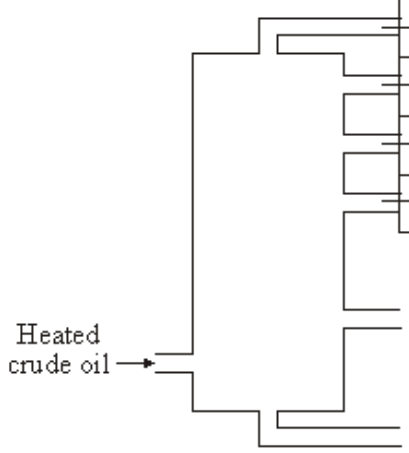

Main fuel fraction	A hydrocarbon in this fraction	Boiling point of hydrocarbon in °C
Gases	Propane, C_3H_8	–42
Petrol	Octane, C_8H_{18}	126
Paraffin	Dodecane, $C_{12}H_{26}$	216
Diesel	Eicosane, $C_{20}H_{42}$	344

(i) How does the number of carbon atoms in a hydrocarbon affect its boiling point?

.....

.....

(1)

(ii) Suggest the lowest temperature to which crude oil needs to be heated to vaporize all the hydrocarbons in the table.

Temperature = ... °C

(1)

(iii) Dodecane boils at 216 °C. At what temperature will dodecane gas condense to liquid?

Temperature = ... °C

(1)

(b) The bar chart shows the relative supply and demand for the petrol and diesel fractions.

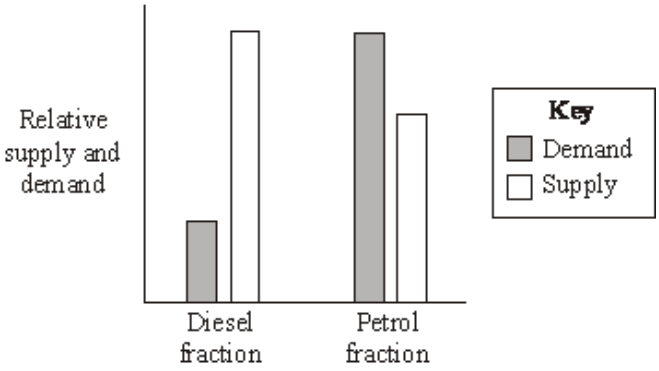

(i) How does the relative supply and demand for petrol and diesel fractions cause problems for an oil company?

.....

.....

.....

.....

(2)

(ii) Suggest **one** way an oil company could solve these problems.

.....

.....

(1)
(Total 6 marks)

Q23. Many human activities result in carbon dioxide emissions.
Our carbon footprint is a measure of how much carbon dioxide we each cause to be produced.

(a) Why should we be concerned about our carbon footprint?

.....

.....

.....

(1)

(b) Most power stations in the UK burn coal.
Coal was formed from tree-like plants over millions of years.

Suggest why burning wood instead of coal would help to reduce our carbon footprint.

.....

.....

.....

.....

.....

.....

.....

.....

(3)
(Total 4 marks)

Q24. Crude oil is used to produce many useful materials.

(a) The diagram shows some of the fractions produced from crude oil by fractional distillation.

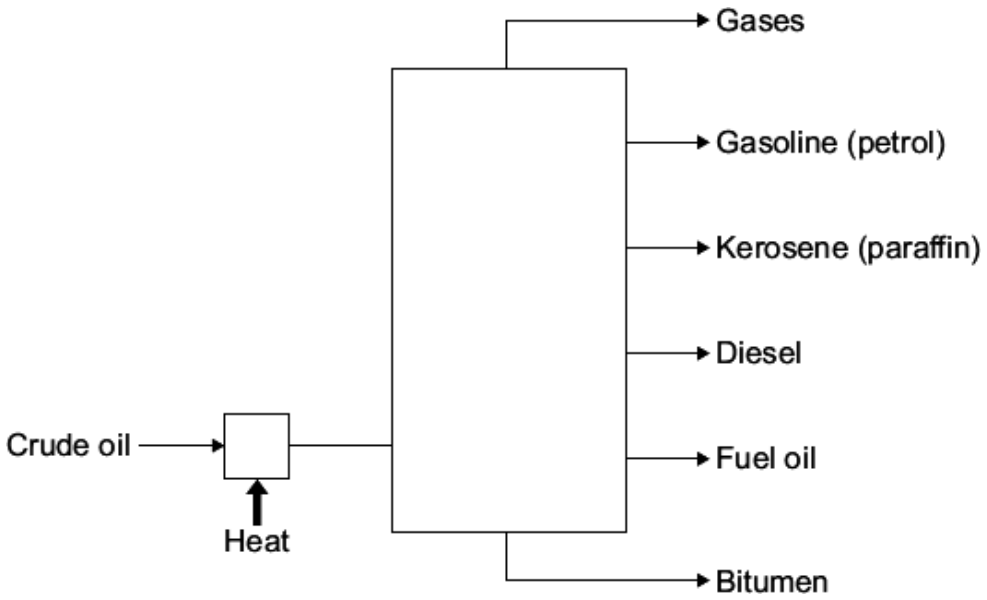

Use the diagram to help you to explain how crude oil is separated into fractions.

You should use the words evaporated and condensed in your answer.

.....

.....

.....

.....

.....

.....

.....

.....

(3)

(b) The table shows some information about four of the fractions from crude oil that are used as fuels.

Fraction	Boiling point in °C	Number of carbon atoms found in the molecules
Gasoline (petrol)	20 - 200	5 - 10
Kerosene (paraffin)	180 - 260	10 - 16
Diesel	260 - 340	14 - 20
Fuel oil	370 - 600	20 - 70

Use the information in the table to help you to answer these questions.

(i) How can you tell that each of the fractions is a mixture?

.....

.....

(1)

(ii) How does the number of carbon atoms in a molecule affect its boiling point?

.....

.....

(1)

(c) Fuels are substances that release energy.

(i) Name the reaction that releases energy from a fuel such as gasoline (petrol).

.....

(1)

(ii) Describe how fuel oil is broken down into smaller, more useful molecules such as gasoline (petrol).

.....

.....

.....

.....

(2)
(Total 8 marks)

Q25. There are two main types of diesel fuel used for cars:

- biodiesel, made from vegetable oils
- petroleum diesel, made from crude oil.

(a) A scientist compared the viscosity of biodiesel with petroleum diesel at different temperatures.
The scientist measured the time for the same volume of diesel to flow through a small hole in a cup.
The scientist's results are plotted on the grid.

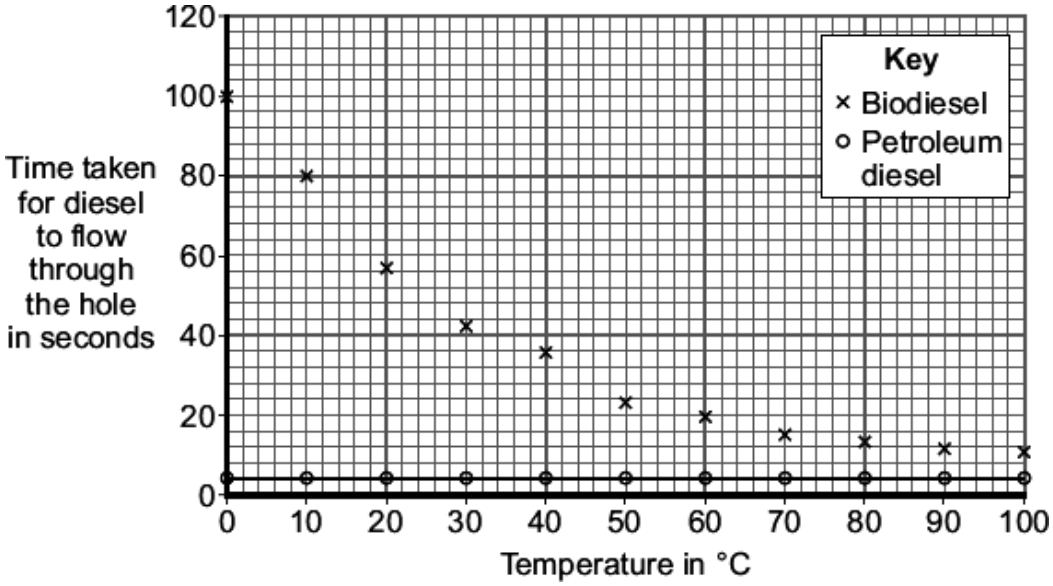

(i) Draw a line of best fit for the biodiesel results.

(1)

(ii) What conclusions can the scientist make about the viscosity of biodiesel compared with the viscosity of petroleum diesel at different temperatures?

.....

.....

.....

.....

(2)

(iii) Biodiesel may be less suitable than petroleum diesel as a fuel for cars.
Use these results to suggest **one** reason why.

.....

.....

(1)

(b) Biodiesel can be mixed with petroleum diesel to make a fuel for cars.
In a car engine, the diesel fuel burns in air.
The waste products leave the car engine through the car exhaust system.
The bar chart compares the relative amounts of waste products made when three different types of diesel fuel burn in a car engine.

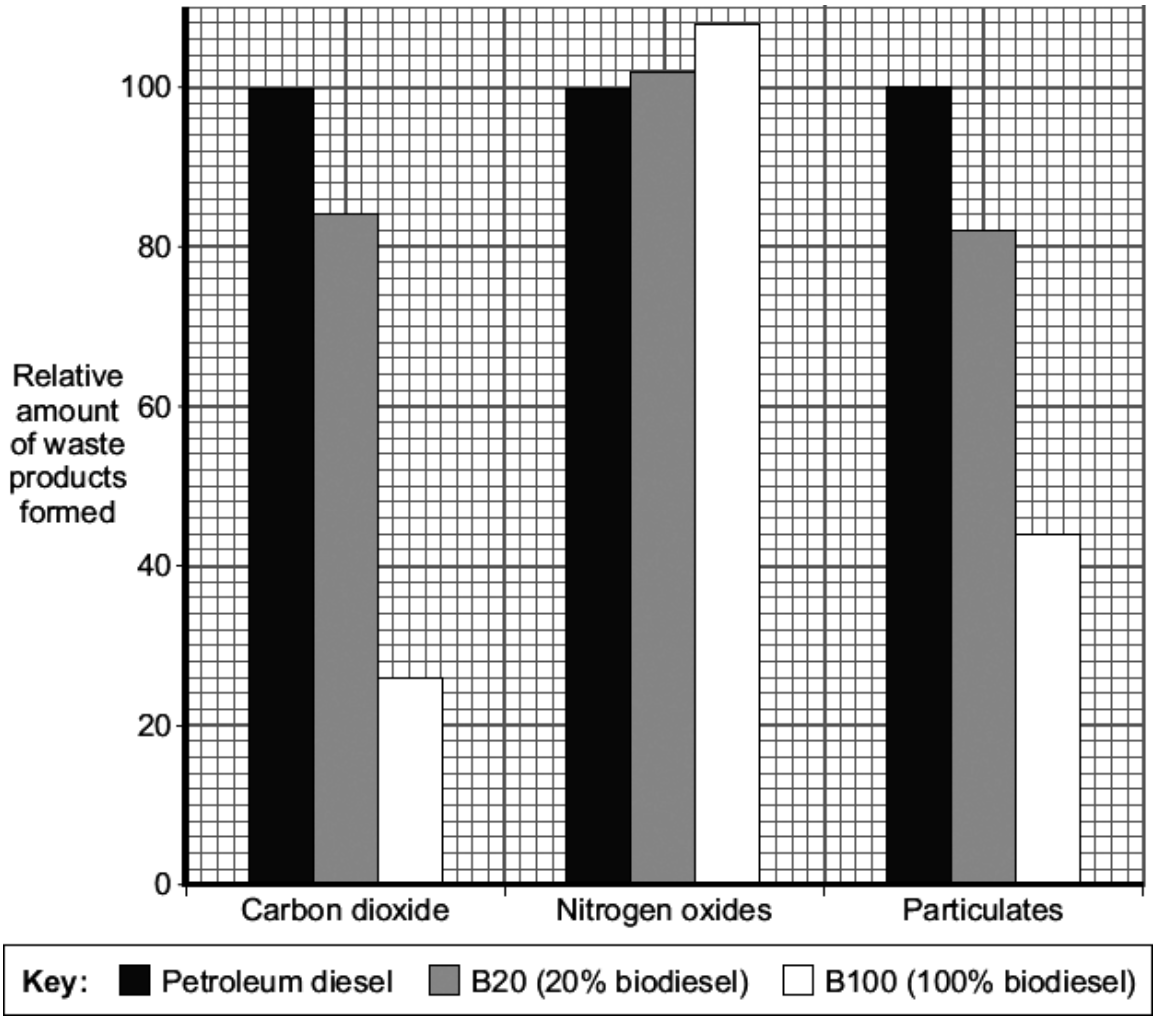

Nitrogen oxides and sulfur dioxide cause a similar environmental impact.

(i) What environmental impact do particulates from car exhaust systems cause?

.....

(1)

(ii) What is the percentage reduction in particulates when using B100 instead of petroleum diesel?

..... %

(1)

(iii) Replacing petroleum diesel with biodiesel increases one type of environmental pollution.

Use the bar chart and the information given to explain why.

.....

.....

.....

.....

(2)

(iv) A carbon neutral fuel does **not** add extra carbon dioxide to the atmosphere.

Is biodiesel a carbon neutral fuel?

Use the bar chart and your knowledge to explain your answer.

.....

.....

.....

.....

(2)
(Total 10 marks)

Q26. Crude oil is used to produce poly(ethene).

(a) Fractional distillation is used to separate crude oil into fractions.

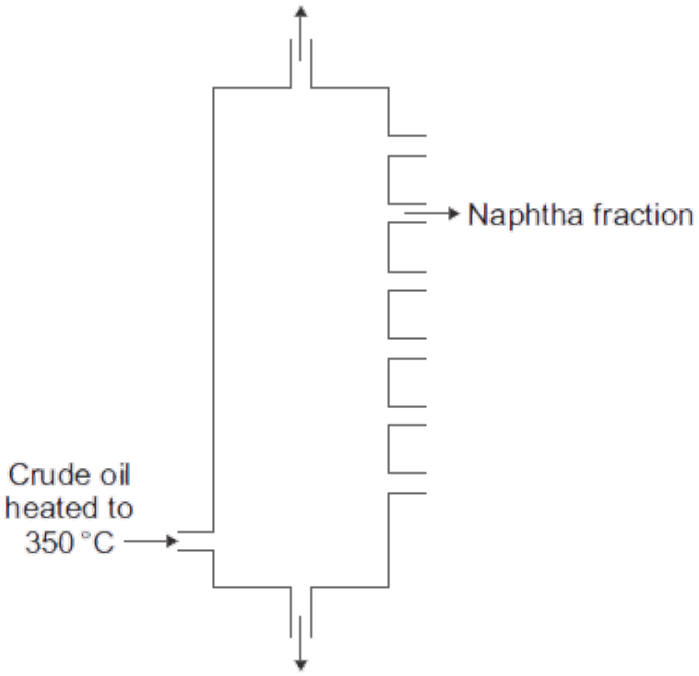

(i) Write a number, **2**, **3**, **4** or **5**, next to each stage so that the description of fractional distillation is in the correct order. Numbers **1** and **6** have been done for you.

Number	Stage
1	The crude oil is heated to 350 °C.
	When a fraction in the vapours cools to its boiling point, the fraction condenses.
	Any liquids flow down to the bottom of the column and the hot vapours rise up the column.
6	The condensed fraction is separated and flows out through a pipe.
	When the hot vapours rise up the column, the vapours cool.
	Most of the compounds in the crude oil evaporate.

(2)

(ii) The naphtha fraction is cracked to produce ethene (C_2H_4).
Ethene is used to make the polymer called poly(ethene).

Name **two** substances produced when poly(ethene) burns in air.

1 .....

2 .....

(2)

(b) *In this question you will be assessed on using good English, organising information clearly and using specialist terms where appropriate.*

Each year in the UK, billions of plastic bags are given free to shoppers. These bags are made from poly(ethene) and are often used only once.
After being used many of these plastic bags are either thrown away as litter or buried in landfill sites.

In 2006 over 10 billion of these plastic bags were given free to shoppers.
In 2009 the number of plastic bags given to shoppers had decreased to 6.1 billion.
One reason for the decrease was because some supermarkets made people pay for their plastic bags.

From 2011 a new type of plastic shopping bag made mainly from poly(ethene) had a use-by date of only one year printed on the bag.

Use the information above and your knowledge and understanding to describe advantages and disadvantages of using plastic shopping bags made from poly(ethene).

.....

.....

.....

.....

.....

.....

.....

.....

.....

.....

.....

.....

.....

.....

(6)
(Total 10 marks)

Q27. About 3000 million years ago, carbon dioxide was one of the main gases in the Earth's atmosphere.

About 400 million years ago, plants and trees grew on most of the land. When the plants and trees died they were covered by sand and slowly decayed to form coal.

(a) Describe and explain how the composition of the Earth's atmosphere was changed by the formation of coal.

.....

.....

.....

.....

.....

.....

.....

.....

(3)

(b) Today, coal is burned in power stations to release the energy needed by industry. Carbon dioxide, water and sulfur dioxide are produced when this coal is burned.

Name **three** elements that are in this coal.

.....

.....

.....

(2)

(c) In some power stations coal is mixed with calcium carbonate (limestone). The mixture is crushed before it is burned.

(i) Many chemical reactions happen when this mixture is burned. The chemical equation represents one of these reactions.

Balance the chemical equation.

$2CaCO_3(s) + 2SO_2(g) + O_2(g) \rightarrow$ …… $CaSO_4(s)$ + …… $CO_2(g)$

(1)

(ii) Explain how the use of calcium carbonate in the mixture:

increases atmospheric pollution

.....

.....

.....

.....

decreases atmospheric pollution.

.....

.....

.....

.....

(4)
(Total 10 marks)

Q28. Petroleum diesel is a fuel made from crude oil.
Biodiesel is a fuel made from vegetable oils.
To make biodiesel, large areas of land are needed to grow crops from which the vegetable oils are extracted.
Large areas of forest are cleared by burning the trees to provide more land for growing these crops.

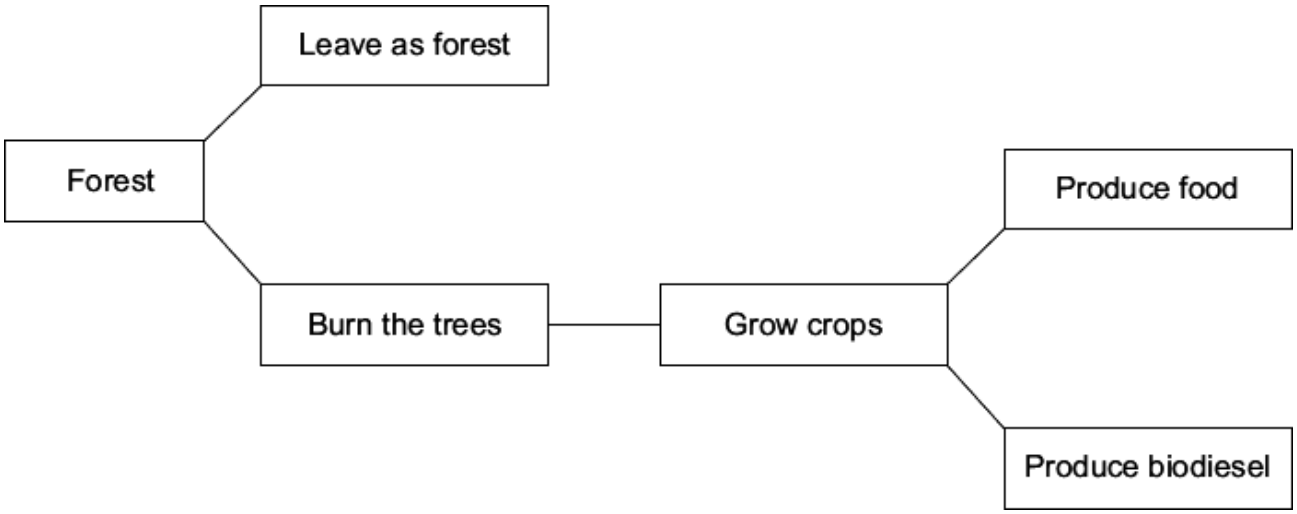

(a) Use this information and your knowledge and understanding to answer these questions.

(i) Carbon neutral means that there is no increase in the amount of carbon dioxide in the atmosphere.

Suggest why adverts claim that using biodiesel is carbon neutral.

.....

.....

.....

.....

.....

.....

(2)

(ii) Explain why clearing large areas of forest has an environmental impact on the atmosphere.

.....

.....

.....

.....

.....

.....

(2)

(b) Why is there an increasing demand for biodiesel?

.....

.....

(1)

(c) Suggest why producing biodiesel from crops:

(i) causes ethical concerns

.....

.....

(1)

(ii) causes economic concerns.

.....

.....

(1)
(Total 7 marks)

Q29. A mixture of petrol and air is burned in a car engine.
Petrol is a mixture of alkanes. Air is a mixture of gases.

The tables give information about the composition of petrol and the composition of air.

Petrol	
Alkane	**Formula**
hexane	C_6H_{14}
heptane	
octane	C_8H_{18}
nonane	C_9H_{20}
decane	$C_{10}H_{22}$

Air	
Gas	**Percentage (%)**
nitrogen	78
oxygen	21
carbon dioxide	0.035
Small amounts of other gases and water vapour	

(a) Use the information above to answer these questions.

(i) Give the formula for heptane

.....

(1)

(ii) Complete the general formula of alkanes.
n = number of carbon atoms

$$C_nH$$

(1)

(b) Alkanes in petrol burn in air.
The equations represent two reactions of hexane burning in air.

Reaction 1 $2C_6H_{14} + 19O_2 \rightarrow 12CO_2 + 14H_2O$

Reaction 2 $2C_6H_{14} + 13O_2 \rightarrow 12CO + 14H_2O$

Reaction 2 produces a different carbon compound to **Reaction 1.**

(i) Name the carbon compound produced in **Reaction 2.**

.....

(1)

(ii) Give a reason why the carbon compounds produced are different.

.....

.....

(1)

(c) The table shows the percentages of some gases in the exhaust from a petrol engine.

Name of gas	**Percentage (%)**
nitrogen	68
carbon dioxide	15
carbon monoxide	1.0
oxygen	0.75
nitrogen oxides	0.24
hydrocarbons	0.005
sulfur dioxide	0.005
other gases	

(i) What is the percentage of the other gases in the table?

.....

(1)

(ii) What is the name of the compound that makes up most of the other gases?

.....

(1)

(iii) Give a reason why sulfur dioxide is produced in a petrol engine.

.....

.....

(1)

(iv) State how nitrogen oxides are produced in a petrol engine.

.....

.....

.....

.....

(2)

(d) Many scientists are concerned about the carbon dioxide released from burning fossil fuels such as petrol.

Explain why.

.....

.....

.....

.....

(2)
(Total 11 marks)

Q30. This question is about oil reserves.

(a) Diesel is separated from crude oil by fractional distillation.

Describe the steps involved in the fractional distillation of crude oil.

.....

.....

.....

.....

.....

.....

.....

.....

(3)

(b) Diesel is a mixture of lots of different *alkanes*.

What are *alkanes*?

.....

.....

.....

.....

.....

(2)

(c) *In this question you will be assessed on using good English, organising information clearly and using specialist terms where appropriate.*

Petroleum products, such as petrol, are produced from crude oil.
The graph shows the possible future production of petroleum products from crude oil and the expected demand for petroleum products.

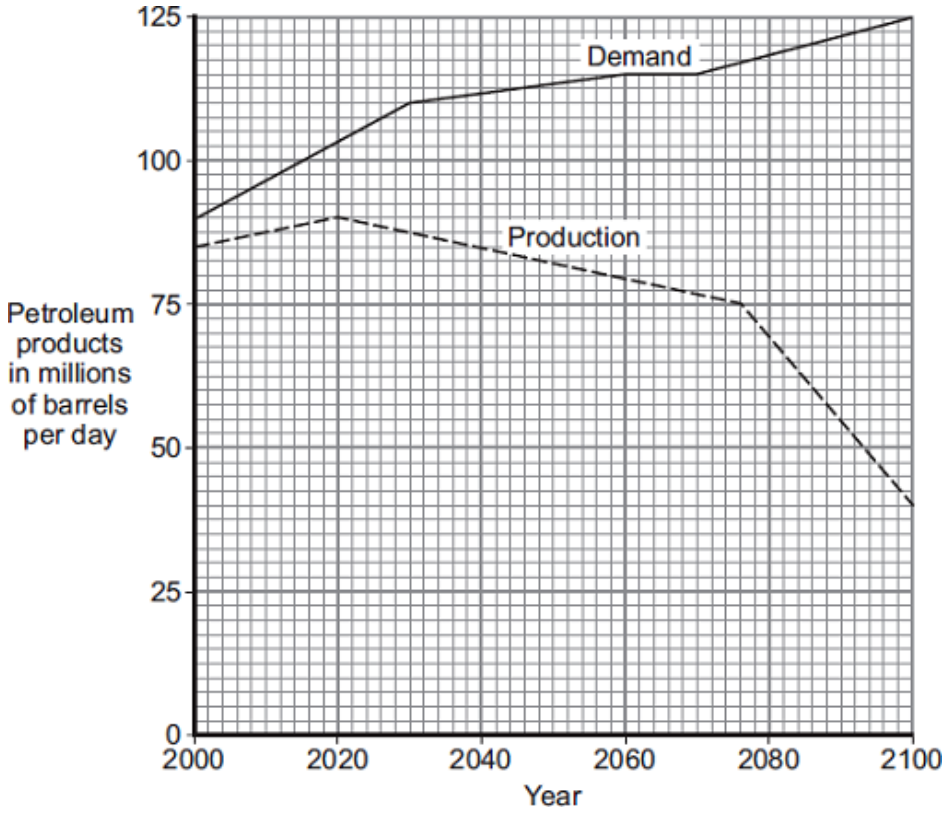

Canada's oil sands hold about 20% of the world's known crude oil reserves.

The oil sands contain between 10 to 15% of crude oil. This crude oil is mainly bitumen.

In Canada the oil sands are found in the ground underneath a very large area of forest. The trees are removed. Then large diggers and trucks remove 30 metres depth of soil and rock to reach the oil sands. The oil sands are quarried. Boiling water is mixed with the quarried oil sands to separate the bitumen from the sand. Methane (natural gas) is burned to heat the water.

The mixture can be separated because bitumen floats on water and the sand sinks to the bottom of the water. The bitumen is cracked and the products are separated by fractional distillation.

Use the information given and your knowledge and understanding to suggest the advantages and disadvantages of extracting petroleum products from oil sands.

.....

.....

.....

.....

.....

.....

.....

.....

.....

.....

.....

.....

.....

.....

.....

.....

.....

.....

(6)
(Total 11 marks)

Q31. Crude oil is a mixture of many different chemical compounds.

(a) Fuels, such as petrol (gasoline), can be produced from crude oil.

(i) Fuels react with oxygen to release energy.

Name the type of reaction that releases energy from a fuel.

.....

(1)

(ii) Fuels react with oxygen to produce carbon dioxide.
The reaction of a fuel with oxygen can produce a different oxide of carbon.

Name this different oxide of carbon and explain why it is produced.

.....

.....

.....

.....

(2)

(b) Most of the compounds in crude oil are hydrocarbons.
Hydrocarbons with the smallest molecules are very volatile.

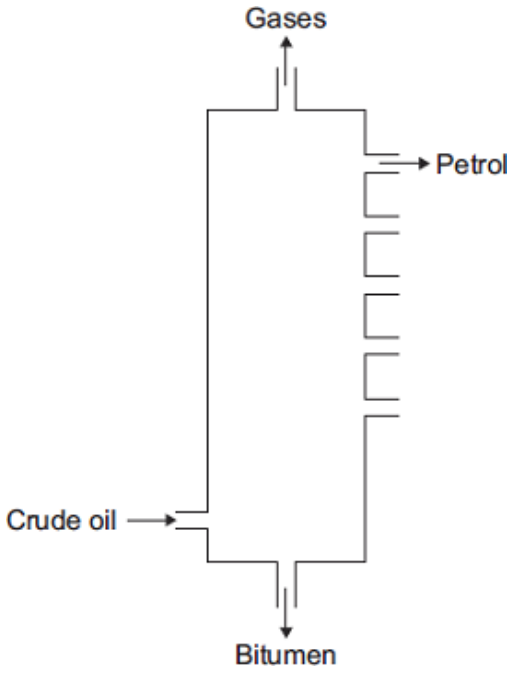

In this question you will be assessed on using good English, organising information clearly and using specialist terms where appropriate.

Describe and explain how **petrol** is separated from the mixture of hydrocarbons in crude oil.

Use the diagram and your knowledge to answer this question.

.....

.....

.....

.....

.....

.....

.....

.....

.....

.....

.....

(6)
(Total 9 marks)