Q1. The diagram shows the design of a solar cooker. The cooker heats water using infrared radiation from the Sun.

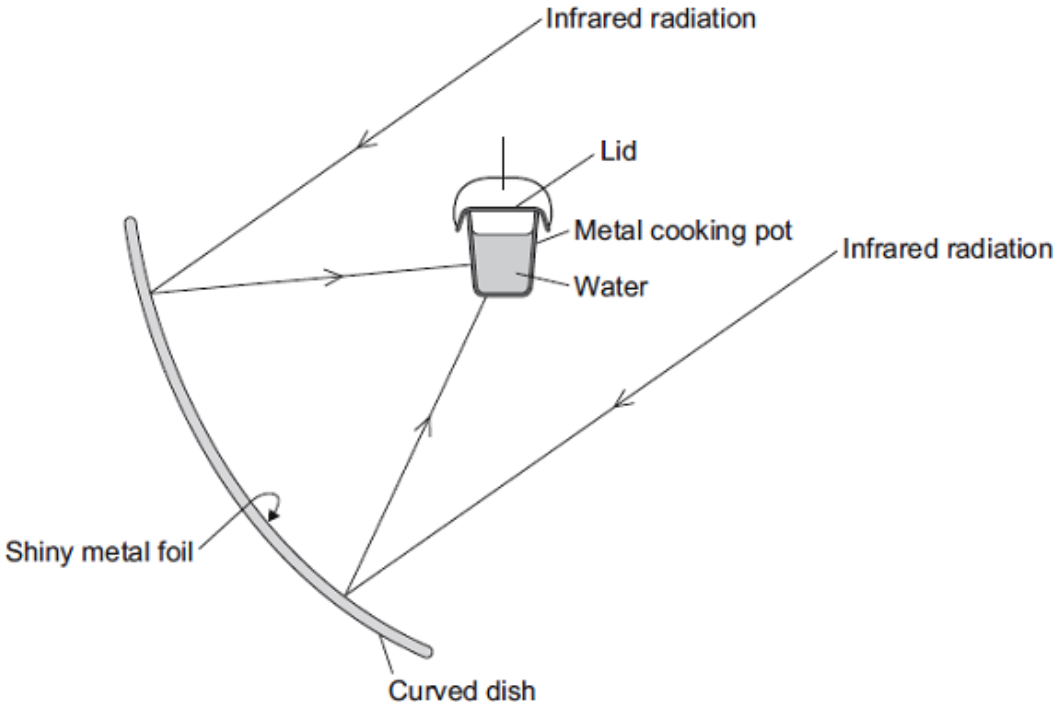

(a) Why is the inside of the large curved dish covered with shiny metal foil?

.....

.....

(1)

(b) Which would be the best colour to paint the outside of the metal cooking pot?

Draw a ring around the correct answer.

black **silver** **white**

Give a reason for your answer.

.....

.....

.....

(2)

(c) Why does the cooking pot have a lid?

.....

.....

(1)

(d) Calculate how much energy is needed to increase the temperature of 2 kg of water by 80 ° C.

The specific heat capacity of water = 4200 J/kg °C.

Use the correct equation from the Physics Equations Sheet.

.....

.....

.....

Energy = ... J

(2)
(Total 6 marks)

Q2. The diagram shows a car radiator. The radiator is part of the engine cooling system.

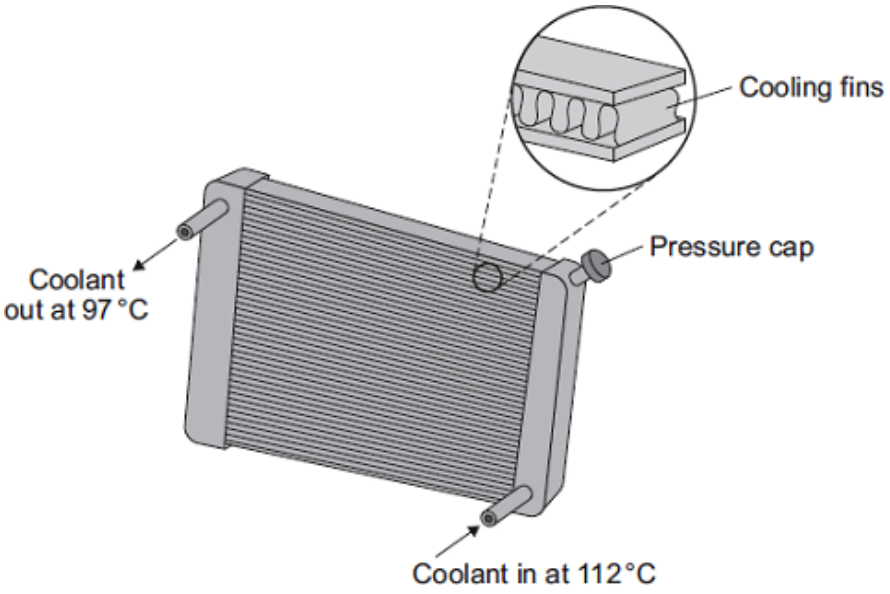

Liquid coolant, heated by the car engine, enters the radiator. As the coolant passes through the radiator, the radiator transfers energy to the surroundings and the temperature of the coolant falls.

(a) Why is the radiator painted black?

.....

.....

.....

.....

(2)

(b) Different radiators have different numbers of cooling fins along the length of the radiator.

The sketch graph shows how the number of cooling fins affects the rate of energy transfer from the radiator.

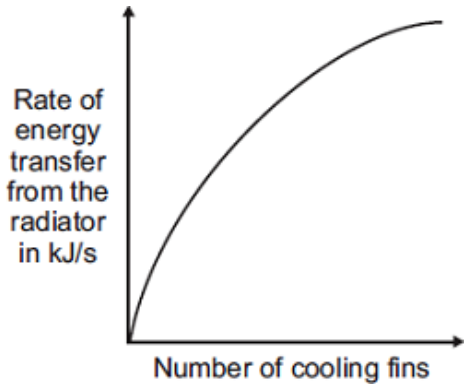

The number of cooling fins affects the rate of energy transfer from the radiator.

Explain how.

.....

.....

.....

.....

(2)

(c) When the car engine is working normally, 2 kg of coolant passes through the radiator each second. The temperature of the coolant falls from 112 °C to 97 °C.

Calculate the energy transferred each second from the coolant.

Specific heat capacity of the coolant = 3800 J/kg °C.

Use the correct equation from the Physics Equations Sheet.

.....

.....

.....

.....

Energy transferred each second = ... J

(3)

(d) On cold days, some of the energy transferred from a hot car engine is used to warm the air inside the car. This is a useful energy transfer.

What effect, if any, does this energy transfer have on the overall efficiency of the car engine?

Draw a ring around the correct answer.

decreases the efficiency	**does not change the efficiency**	**increases the efficiency**

Give a reason for your answer.

.....

.....

.....

(2)
(Total 9 marks)

Q3. The picture shows one type of solar water heater. Water from the tank is slowly pumped through copper pipes inside the solar panel where the water is heated by energy from the Sun.

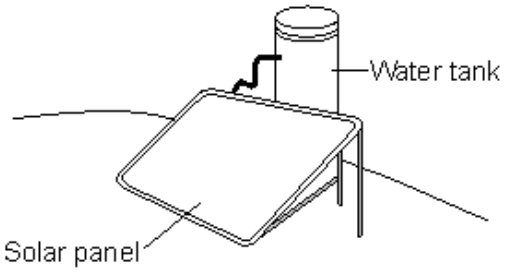

(a) Explain why the copper pipes inside the solar panel are painted black.

.....

.....

.....

.....

(2)

(b) Each day the average European family uses 100 kg of hot water.
To kill bacteria, the water going into the tank at 20 °C must be heated to 60 °C.

Calculate the energy needed to increase the temperature of 100 kg of water by 40 °C.

Specific heat capacity of water = 4200 J/kg °C.

Write down the equation you use, and then show clearly how you work out your answer.

.....

.....

.....

.....

Energy transferred = ... J

(2)

(c) The bar chart shows how the amount of solar energy transferred to the water heater varies throughout the year.

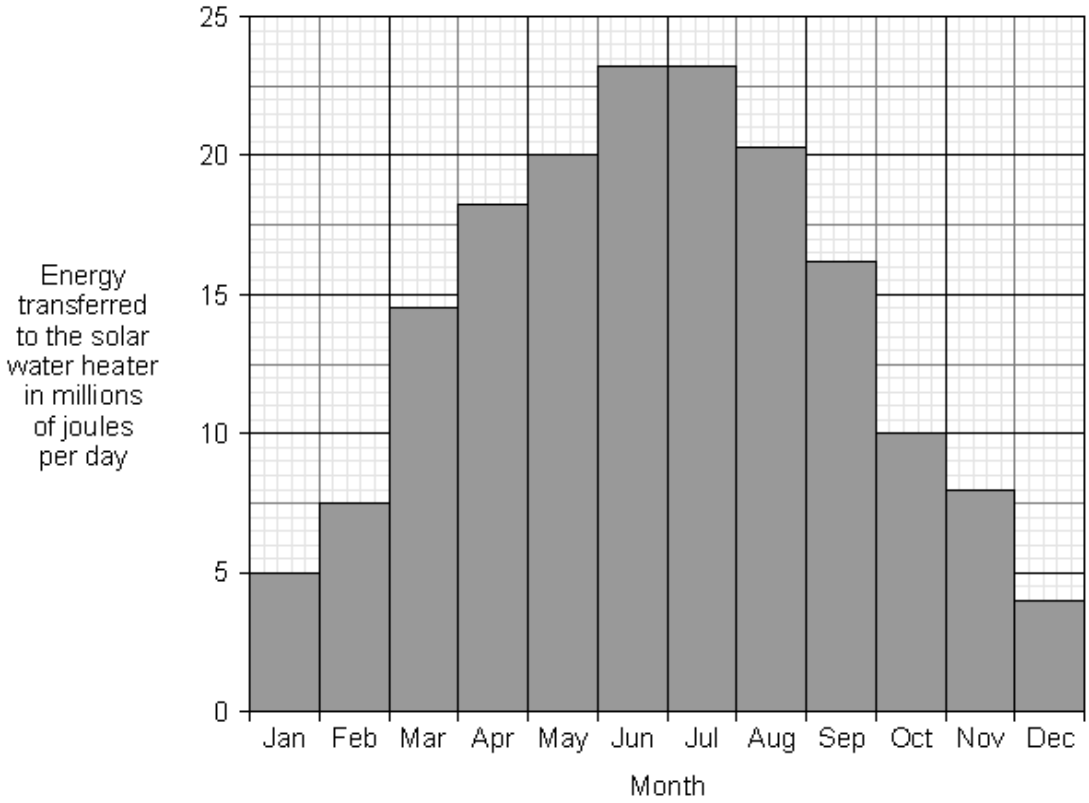

How many months each year will there **not** be enough solar energy to provide the hot water used by an average European family?

..... months

(1)

(d) *In this question you will be assessed on using good English, organising information clearly and using specialist terms where appropriate*.

The water in the tank could be heated by using an electric immersion heater.

Outline the advantages and disadvantages of using solar energy to heat the water rather than using an electric immersion heater.

.....

.....

.....

.....

.....

.....

.....

.....

.....

.....

.....

.....

(6)
(Total 11 marks)

M1. (a) to reflect (the infrared)

accept (shiny surfaces) are good reflectors
ignore reference to incorrect type of wave

1

(b) black

1

best absorber (of infrared)

answer should be comparative
black absorbs (infrared) is insufficient
accept good absorber (of infrared)
ignore reference to emitter
ignore attracts heat
ignore reference to conduction

1

(c) to reduce energy loss

accept to stop energy loss
accept heat for energy
accept to stop / reduce convection

or
so temperature of water increases faster

accept to heat water faster
accept cooks food faster

or
reduces loss of water (by evaporation)

1

(d) 672 000

*allow **1** mark for correct substitution, ie 2 × 4200 × 80 provided no subsequent step shown*

2

[6]

M2. (a) (matt) black is a good <u>emitter</u> of infrared / radiation

accept heat for infrared / radiation
ignore reference to good absorber
attracts heat negates this marking point

1

to give maximum (rate of) energy transfer (to surroundings)

accept temperature (of coolant) falls fast(er)
*accept black emits more radiation for **1** mark*
*black emits most radiation / black is the best emitter of radiation for **2** marks*

1

(b) the fins increase the surface area

accept heat for energy

1

so increasing the (rate of) energy transfer

or

so more fins greater (rate of) energy transfer

1

(c) 114 000

*allow **1** mark for correct temperature change, ie 15 (°C)*

or

*allow **2** marks for correct substitution, ie 2 × 3 800 × 15*

*answers of 851 200 **or** 737 200 gain **2** marks*

or

*substitution 2 × 3800 × 112 **or** 2 × 3800 × 97 gains **1** mark*

*an answer of 114 kJ gains **3** marks*

3

(d) increases the efficiency

1

less (input) energy is wasted

accept some of the energy that would have been wasted is (usefully) used

or

more (input) energy is usefully used

accept heat for energy

1

[9]

M3. (a) because black is a good absorber of radiation

1

there will be a faster transfer of energy

allow the temperature of the water rises faster

1

(b) 16 800 000

*allow **1** mark for substitution into correct equation*
ie 100 × 4200 × 40

2

(c) 7 allow

ecf from part (b)

1

(d) Marks awarded for this answer will be determined by the Quality of Written Communication (QWC) as well as the standard of the scientific response.

No relevant content.

0 marks

There is a brief description of the advantages and disadvantages of using solar energy to heat the water rather than using an electric immersion heater, including either advantages or disadvantages from the **examples** below.

Level 1 (1-2 marks)

There is a description of some of the advantages **and** disadvantages of using solar energy to heat the water rather than using an electric immersion heater, with at least **one** advantage and **one** disadvantage from the **examples** below.

Level 2 (3-4 marks)

There is a clear, balanced and detailed description of the advantages **and** disadvantages of using solar energy to heat the water rather than using an electric immersion heater, with a minimum of **two** advantages and **two** disadvantages from the **examples** below.

Level 3 (5-6 marks)

examples of the points made in the response

advantages

accept specific examples of polluting gases

- a renewable energy source
- energy is free
- does not pollute the atmosphere
- no fuel is burnt
- energy can be stored (in the water)

disadvantages

accept unreliable energy source

- only available in daylight hours
- availability fluctuates
- insufficient hours of sunlight in some countries
- average low intensity in some countries

[11]